KFD 400 / KFD 425

KEITH Manufacturing Co.
www.KeithWalkingFloor.com
World Headquarters
Toll-Free: 800-547-6161
Phone: +1-541-475-3802

Europe Headquarters
Phone: +31-342-422007

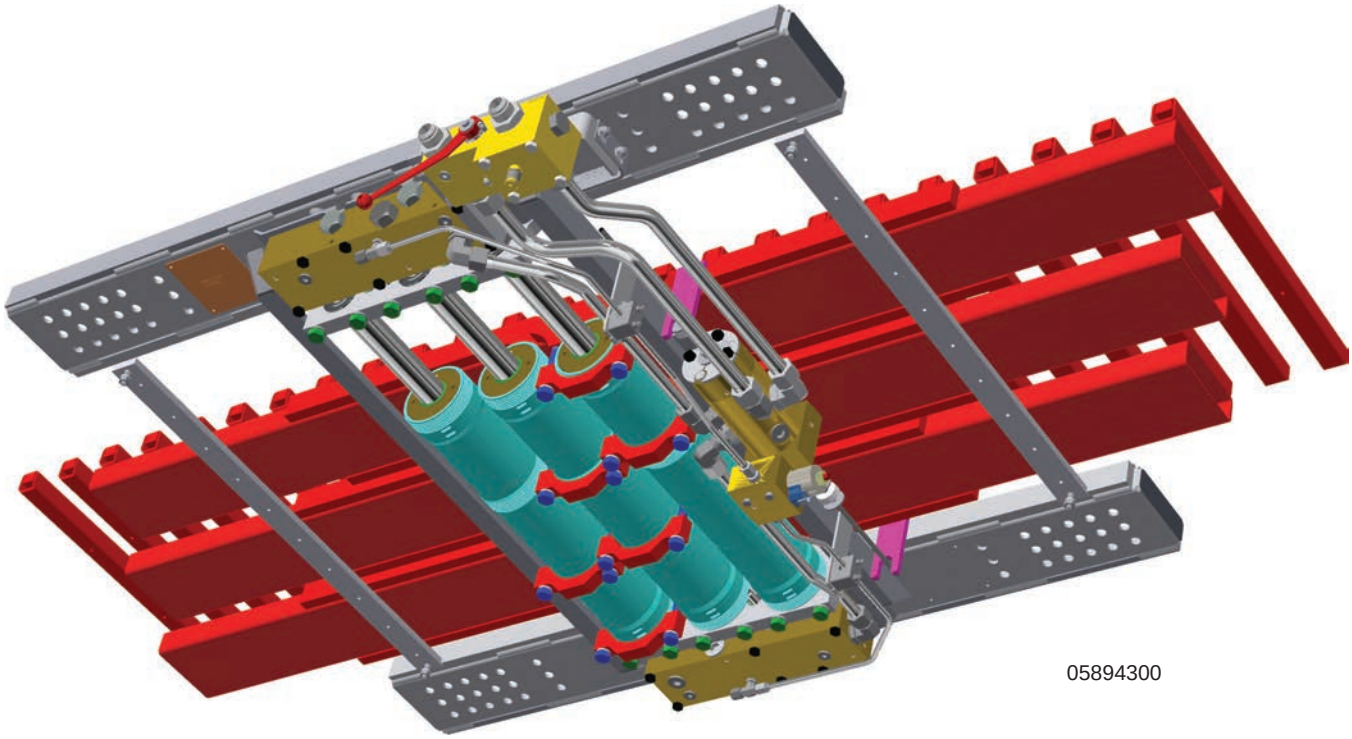

PARTS CATALOG

Original Instructions

©2025 KEITH Manufacturing Co. All Rights Reserved. KEITH, KEITH logo and WALKING FLOOR are registered trademarks of KEITH Manufacturing Co. Equipment manufactured by KEITH Manufacturing Co. is protected by numerous patents both domestic and foreign.

Released: 2025-05-05 DOC06313 Rev. F

Table of Contents

Contact Information - KEITH Manufacturing Co. ii
Service Information ii
Safety Decals 1
Drive Frame Assembly 3
Drive Frame Shims 4
Cross-Drive Supports 5
Cross-Drive Assembly 7
Cylinder Assembly 425 (April 2020 - Present) 9
Cylinder Assembly (Pre April 2020) 11
Manifold Assembly - ORFS (Post April 2019) 13
Manifold Assembly - JIC (Pre May 2019) 15
Front Manifold Fitting Configuration 17
Rear Manifold Fitting Configuration 18
Hydraulic Tubing - ORFS (May 2019 - Present) 19
Hydraulic Tubing - Truck Body - ORFS (May 2019 - Present) 20
Hydraulic Tubing - JIC (Pre - May 2019) 21
Hydraulic Tubing - Truck Body - JIC (Pre - May 2019) 22
Hydraulic Tube Clamp 3/8” & 3/4” 23
Hydraulic Tube Clamp 3/8” 24
Switching Valve & Control Valve Assembly - ORFS (Post April 2019) 25
Switching Valve & Control Valve Assembly - JIC (Pre May 2019) 27
Threaded Rod Assembly 29
Handle Assemblies 30
Ball Valve (On/Off) Assembly - Manual - JIC & ORFS 31
On/Off (Ball Valve) Mounting Kit - Manual - JIC (Pre May 2019) 33
On/Off Valve Mounting Kit - JIC (Pre May 2019) 35
Ball Valve (On/Off) Assembly - Electric/Manual 37
Ball Valve (On/Off) Assembly w/Integrated Filter - Electric/Manual 39
Conversion Kit - Manual to Electric On/Off Ball Valve Assembly 41
Conversion Kit - Manual to Electric On/Off Ball Valve w/Filter 43
On / Off Valve Assembly - ORFS (Post 2019) 45
On / Off Manual Valve Assembly - JIC (2019) 47
On / Off Electric Valve Assembly - JIC (2018) 49
Electrical Controls 51

Contact Information - KEITH Manufacturing Co.

World Headquarters - USA
401 NW Adler St.
Madras, OR 97741
Toll-Free: 800-547-6161
Phone: +1-541-475-3802
Email: Sales@KeithWalkingFloor.com

Europe Headquarters
Barneveld, The Netherlands
Phone: +31-342-422007
Email: EuroSales@KeithWalkingFloor.com

Canada
Brantford, ON
Phone: +1-519-756-9178
Email: CanadaSales@KeithWalkingFloor.com

México
Guadalajara, Jal.
Phone: +52-333-616-5079
Email: KMC_Mexico@KeithWalkingFloor.com

Australia
Somerville, VIC
Phone: +61-0404-041-883
Email: AUSales@KeithWalkingFloor.com

Not all parts or services available in all regions. Some components may only be sold assembled or in kits. Contact your regional office for information on available parts and services.

Service Information

- Use hydraulic oil or Vaseline to lubricate seals. Do NOT use grease.
- Do NOT use Teflon tape on any hydraulic components.
- When welding on drive frame, ground specifically to what you are welding on, otherwise it can short across component assemblies damaging seals and gaskets.
- KEITH sells flow meters, pressure testers for troubleshooting and several tools to aid in rebuilding components and drives.

KEITH Mfg. fabricates many standard drive systems, included in this parts catalog, and also fabricates custom drive systems, too numerous to include, therefore KEITH requires the following information from your drive system to ensure we provide you with most accurate information. Please have the following information readily available before contacting KEITH for support:

- Model Number (Located on the Serial Plate of the drive unit)
- Serial Number (Located on the Serial Plate on the drive unit)
- Quantity & length of floor slats
- Vehicle make and unit installer

Safety Decals

Old - 2019 (Worded)	2020 - Future (Wordless)	Safety Decal Placement Guide #'s →	Decal Kit #'s →	LH KFD & KRFII (ELEC CV) #84804334	RH KFD & KRFII (ELEC CV) #84804335
		1	84804311	1	1
		2	84804312	4	4
		3	84804313	2	2
		4	84804314	2	2
		5	84804315	2	2
		6	84804316	2	2
		7	84804317	1	1
		8	84804318	1	1

Safety Decals

Old - 2019 (Worded)	2020 - Future (Wordless)	Safety Decal Placement Guide #'s →	Decal Kit #'s →	LH KFD & KRFII (ELEC CV) #84804334	RH KFD & KRFII (ELEC CV) #84804335
	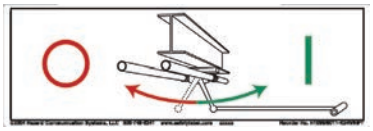	9	84804129	1	1
	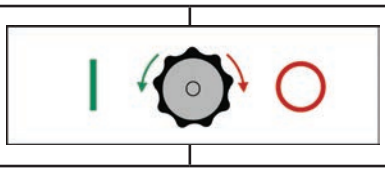	9	84803913	-	-
Controls on Left Side of Truck/Trailer	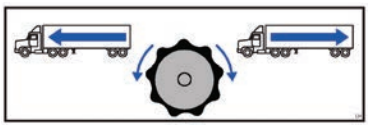	10	84803904	1	-
	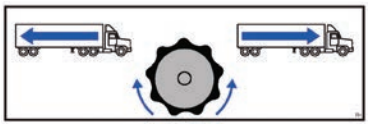 Controls on Right Side of Truck/Trailer	10	84803905	-	1

Drive Frame Assembly

06199002

Drive Frame Assembly

ID #	Qty	400 Part #	425 Part #	Description
-	**(1)**	**05902402**	**06199002**	**Drive Frame Assembly (Includes items 1-4)**
1	1	05902401	06199001	Drive Assembly
2	2	06231401	06200901	Clamp Lower Rod
3	12	87078000		Washer Lock M16
4	12	87017010		Bolt Hex M16mmx2x80mm Gr. 10.9

Drive Frame Shims

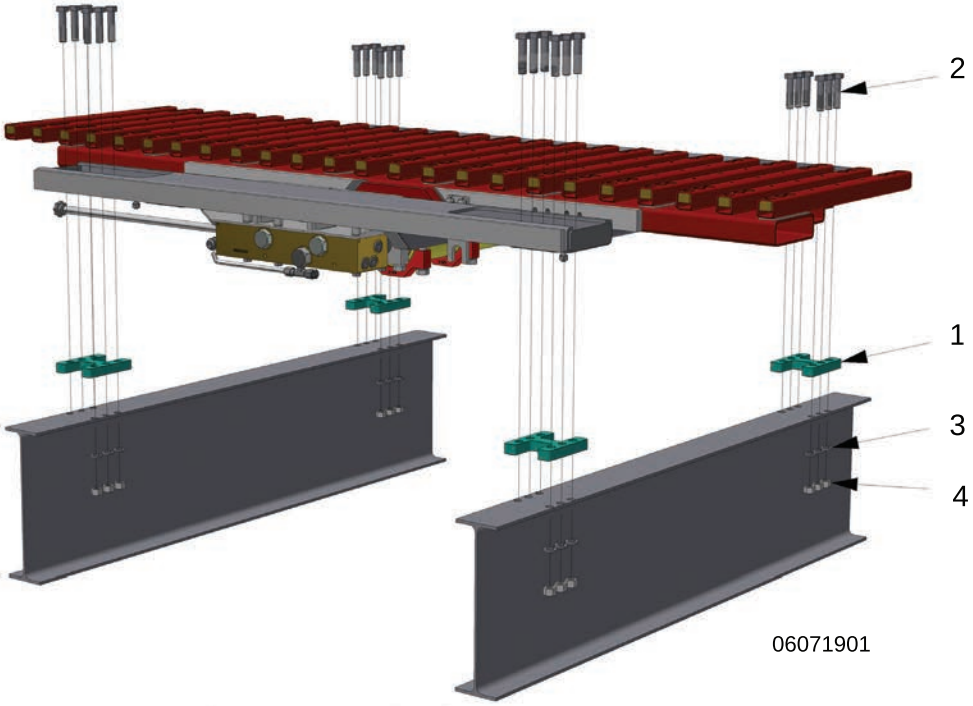

Standard height of drive = 80mm
No shim required for 80mm high cross members

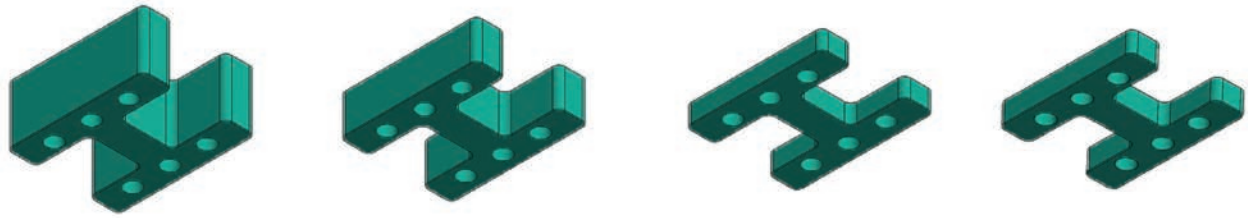

140mm X-Member
60mm Shim
05746301

120mm X-Member
40mm Shim
06034901

100mm X-Member
20mm Shim
06035001

4" X-Member
.85" shim
06035201

Drive Frame Shims

		Trailer Cross Member Height					
		140mm	120mm	100mm	4”	80mm	
ID#	Qty	Part #	Part #	Part #	Part #	Part #	Description
1	(4)	05746301	06034901	06035001	06035201	-	Frame Shims (60mm, 40mm, 20mm or 0.85”)
2	24	87018225	87017890	87017000		87016550	Bolt Hex M16 x (120, 100, 80 or 60mm)
3	24	87078000					Washer Lock M16
4	24	87103010					Nut Nylock M16x2

Cross-Drive Supports

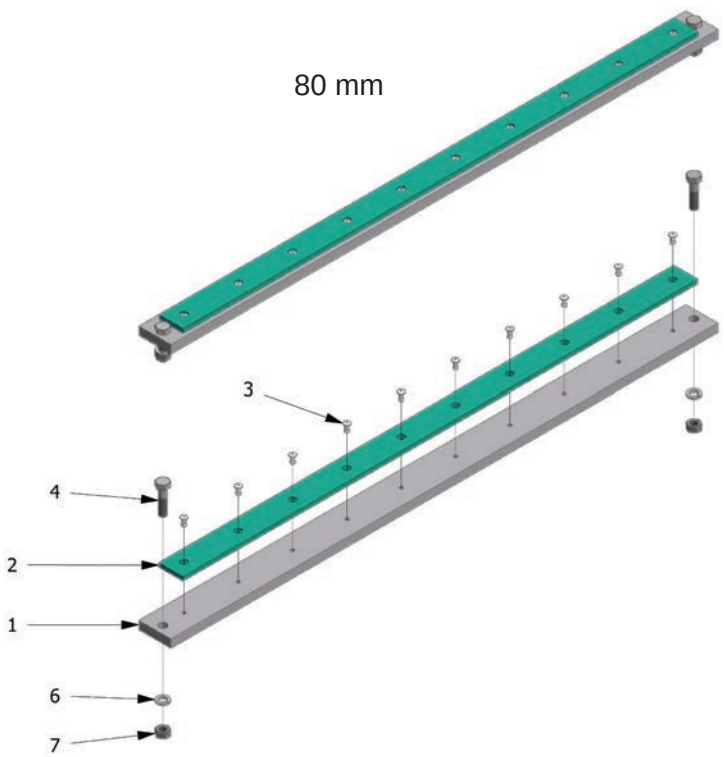

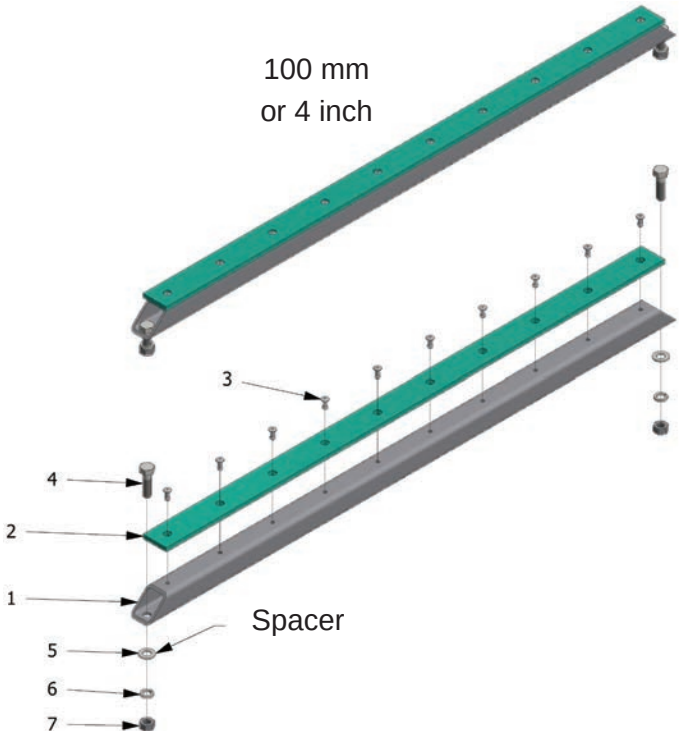

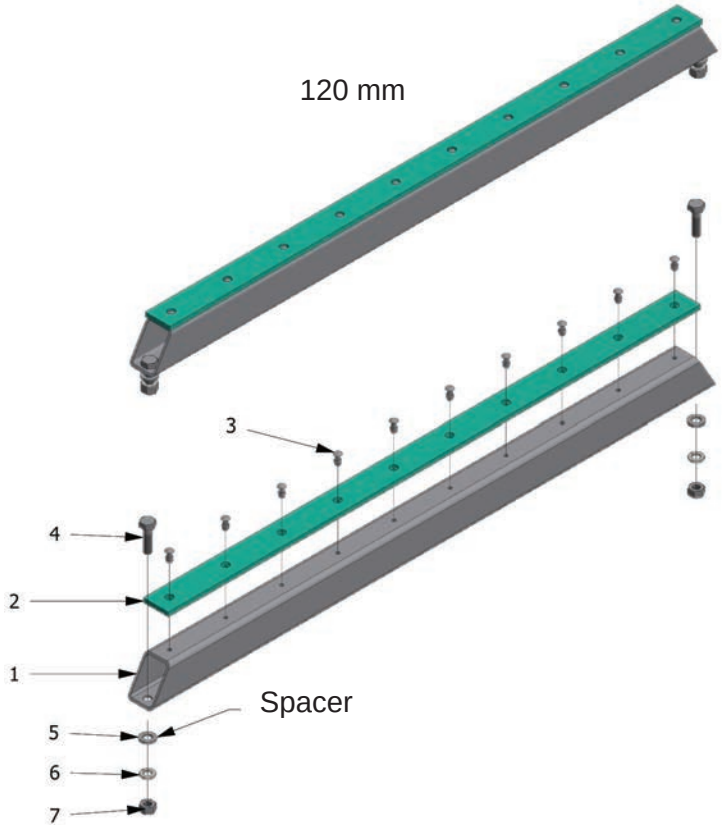

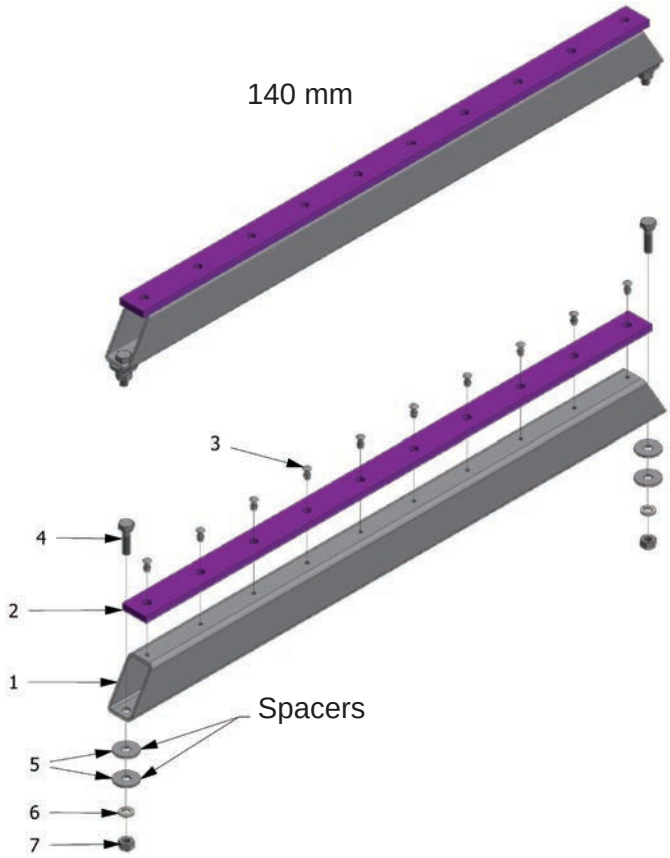

Cross-Drive Supports

ID#	Qty	80 mm Part #	100 mm or 4” Part #	120 mm Part #	140 mm Part #	Description
-	**(2)**	**06000802**	**05999901**	**06002602**	**06001002**	**Cross-Drive Support Assembly (Includes items 1-7)**
1	1	06000701	-	-	-	Cross-Drive Support 1/2"x2"
	1	-	05999801	-	-	Cross-Drive Support 1-1/4"x1-1/4"
	1	-	-	06002501	-	Cross-Drive Support 1-1/2"x2"
	1	-	-	-	06000901	Cross-Drive Support 1-1/2"x2-1/2"
2	1	06001101			-	Wear Bearing UHMW 1/4"
	1	-	-	-	06002801	Wear Bearing UHMW 3/8"
3	10	86528150				Rivet Aluminum 3/16"x1/2"
4	2	-	87008510	-	-	Bolt Hex 10.9 10MMX35MM
	2	87008530	-	87008530	87008530	Bolt Hex M10x1.5x50mm
5	2	-	87076000	87076000	-	Washer Flat M10
	4	-	-	-	86554700	Washer Fender 3/8"
6	2	87076510				Washer Lock M10
7	2	87101500				Nut Nylock Hex M10x1.5

Cross-Drive Assembly

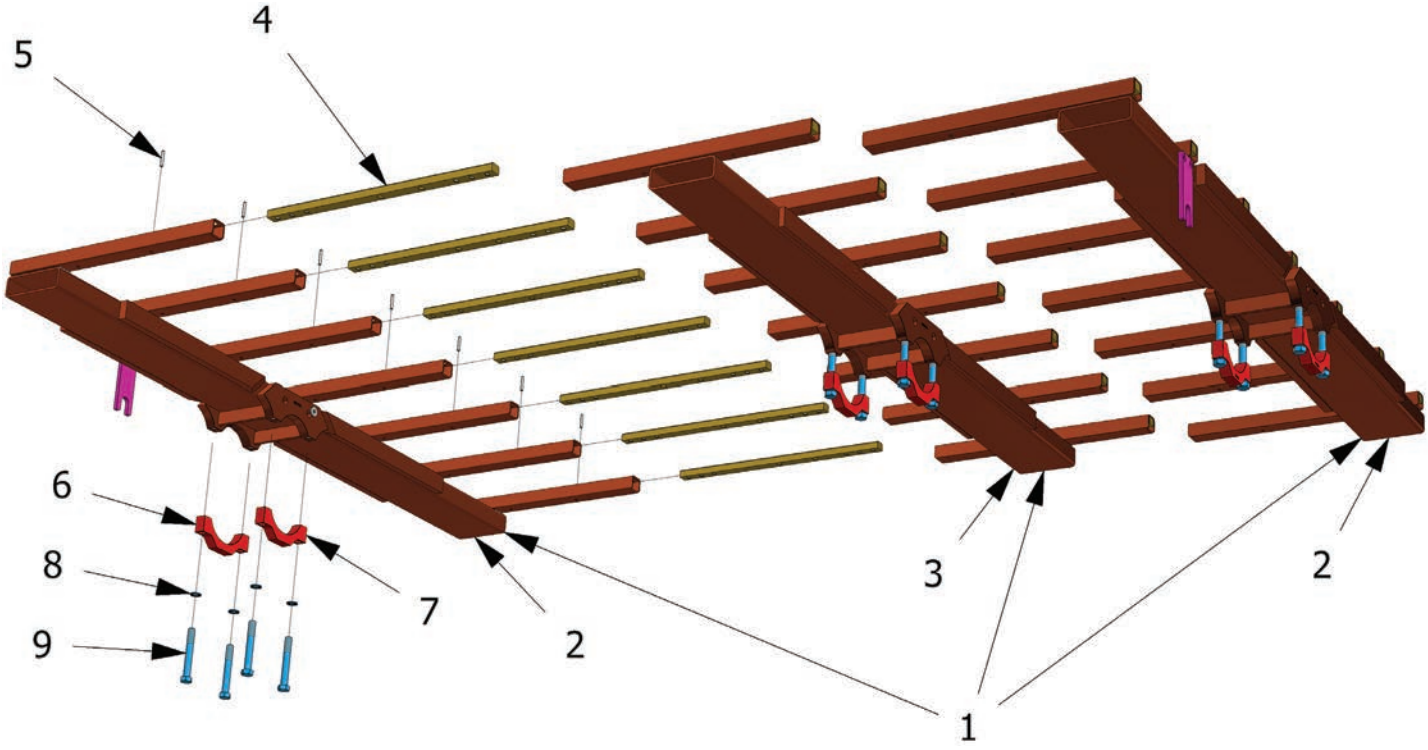

Cross-Drives available only in multiples of 3 (ie: 21, 24, 27 metric or SAE)

06246103

Cross-Drive Assembly

ID #	Qty	400 Part #	425 Part #	Description
1	**(1)**	**06087803**	**06246103**	**Cross-Drive Set 21 Slat 97mm Flooring (Includes items 2-5)**
2	2	06087801	06246101	Cross-Drive #1 & #3
3	1	06087802	06246102	Cross-Drive #2
1	**(1)**	**05836802**	**06200103**	**Cross-Drive Set 24 Slat 97mm Flooring (Includes items 2-5)**
2	2	05836402	06200101	Cross-Drive #1 & #3
3	1	05836502	06200102	Cross-Drive #2
1	**(1)**	**05963903**	**06203003**	**Cross-Drive Set 27 Slat 97mm Flooring (Includes items 2-5)**
2	2	05963901	06203001	Cross-Drive #1 & #3
3	1	05963902	06203002	Cross-Drive #2
1	**(1)**	**06202803**	**06201903**	**Cross-Drive Set 21 Slat 112mm Flooring (Includes items 2-5)**
2	2	06202801	06201901	Cross-Drive #1 & #3
3	1	06202802	06201902	Cross-Drive #2
1	**(1)**	**05964003**	**06246203**	**Cross-Drive Set 21 Slat SAE Flooring (Includes items 2-5)**
2	2	05964001	06246201	Cross-Drive #1 & #3
3	1	05964002	06246202	Cross-Drive #2
1	**(1)**	**06119503**	**06234403**	**Cross-Drive Set 24 Slat SAE Flooring (Includes items 2-5)**
2	2	06119501	06234401	Cross-Drive #1 & #3
3	1	06119502	06234402	Cross-Drive #2
1	**(1)**	**06121303**	**06234503**	**Cross-Drive Set 27 Slat SAE Flooring (Includes items 2-5)**
2	2	06121301	06234501	Cross-Drive #1 & #3
3	1	06121302	06234502	Cross-Drive #2
1	**(1)**	**-**	**06494803**	**Cross-Drive Set 18 V-Slat 5.25" Flooring (Includes items 2-5)**
2	2	-	06494801	Cross-Drive #1 & #3
3	1	-	06494802	Cross-Drive #2
4	varies	05755202		Bolt Bar Drive Shoe KFD
5	varies	86651450		Roll Pin 1/4"x 1/2"
6	3	05731601	06200701	Clamp Lower Cross-Drive Threaded (sold separately)
7	3	05739501	06200801	Clamp Lower Cross-Drive Smooth (sold separately)
8	12	86559090		Washer Wedge Locking M16 (2-pcs) (sold separately)
9	12	87018510		Bolt Hex M16x2x120mm Gr. 10.9 (sold separately)

Cylinder Assembly 425 (April 2020 - Present)

Drive Serial number must be provided to determine actual part numbers.

Changed barrel & head to square wire locks, removed (1) #16 O-Ring.

Use Red Loctite on all set screws

Piston Assembly

Head Assembly

060039

Use hydraulic oil or Vaseline to lubricate seals.
Do NOT use grease!
Do NOT use Teflon tape!

TOOLS

Spanner Wrench

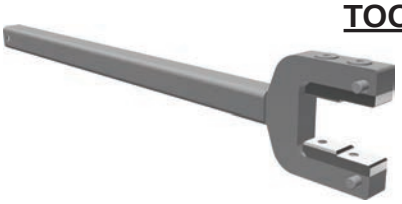

Spanner & Rod Wrench

Nose cone for head installation

Cylinder Assembly 425 (April 2020 - Present)

ID#	Qty	425 Part #	Description
1	**(3)**	**06201001**	**Cylinder Assembly (Includes items 2-23)**
2	**1**	10733901	Barrel Assembly, Square Wire Lock
3	**(1)**	**06247601**	**Rod w/Piston & Head Assemblies (Includes items 4-9 & 14)**
4	1	05730101	Rod Nut Adjustable
5	1	05732001	Rod Nut Stationary
-	**(2)**	**05828002**	**Cylinder Rod Assy KFD KSD (Includes items 6-8)**
6	1	05828001	Rod 45mm 5/8” ID (Not sold separately)
7	1	84380000	209 O-Ring Buna 90
8	1	84390400	209 O-Ring Back-up Buna 90
9	**(1)**	**06201301**	**Piston Assembly (Includes items 10-13)**
10	1	06201401	Piston 4.25”
11	1	84403852	Wear Ring Piston 4.25”
12	2	84352510	Seal Piston 4.25”
12-1	2	w/Seal	Seal Back-up
13	2	87007990	Hex Socket Set Screw Cup Point M10x1.5x8mm
13B	2	87007995	Hex Socket Set Screw Full Dog M10x1.5x10mm
14	**(2)**	**06201501**	**Head Assembly (Includes items 15-23)**
15	1	06201601	Head 4.25”
16	1	84385230	242 O-Ring Buna 90
17	1	84393230	242 O-Ring Backup Buna 90
18	4	03812121	Lock Wire SQUARE (Apr ‘20 - Present)
19	1	84400201	Buffer Seal Rod 45mm
19-1	1	w/Seal	Buffer Seal Back-Up Rod 45mm
20	1	84354200	Seal Rod 45mm
20-1	1	w/Seal	Seal Back-Up Rod 45mm
22	2	84401205	PTFE Wear Ring Rod 45mm (Blue)
23	1	84426605	Rod Wiper 45mm
-	**-**	06201801	**Cylinder Seal Kit (Includes items 4, 7-8, 11-13, 16-23)**
			Tools
-	-	10315001	Spanner Wrench for Piston 4.25”
-	-	07306001	Spanner & Rod Wrench for Head Assembly
-	-	07481501	Rod Nose Cone (45 mm = 1.772”)

Cylinder Assembly (Pre April 2020)

Drive Serial number must be provided to determine actual part numbers.

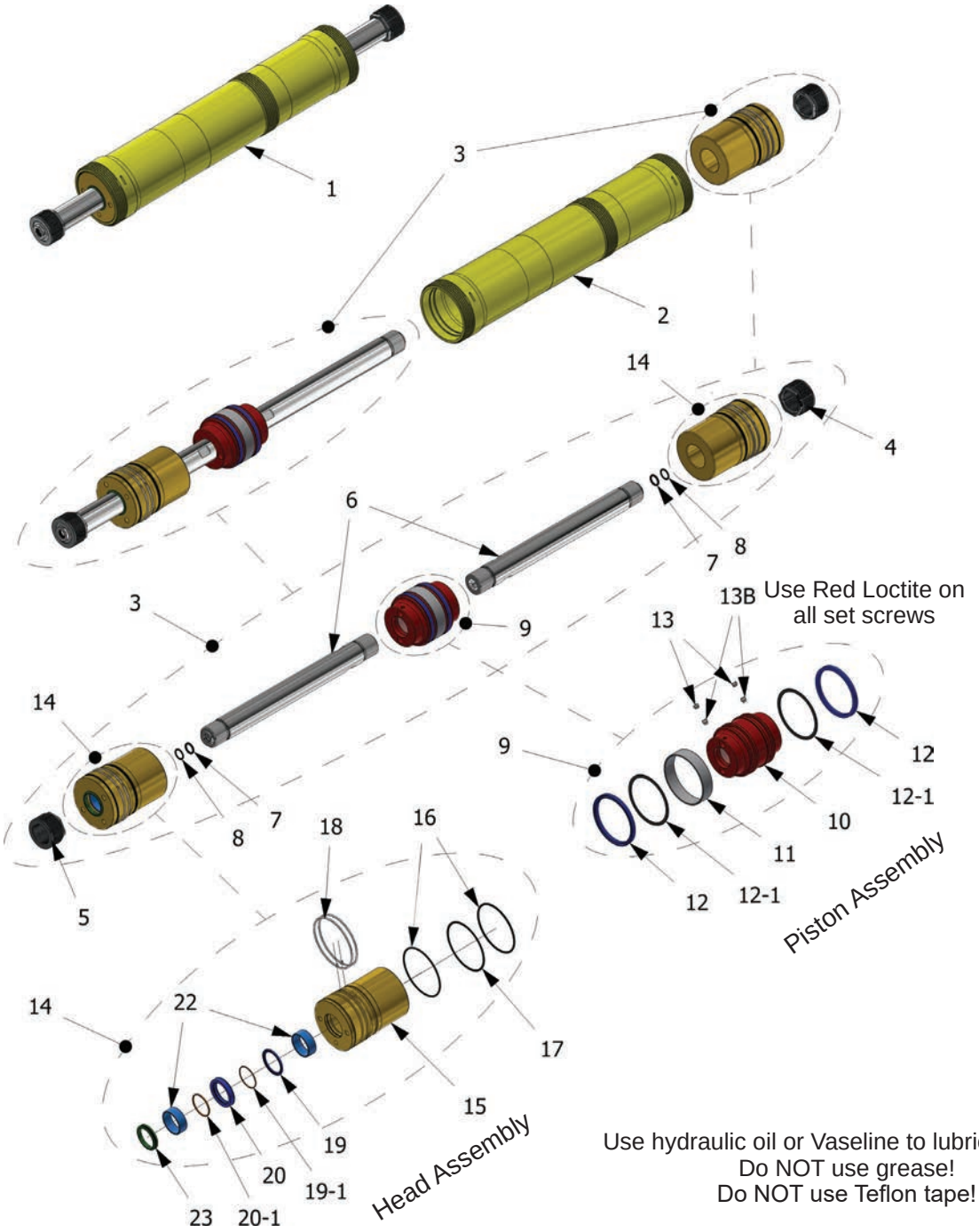

060039

Use hydraulic oil or Vaseline to lubricate seals.
Do NOT use grease!
Do NOT use Teflon tape!

TOOLS

Spanner Wrench

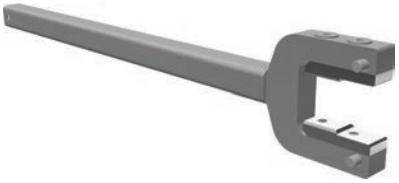

Spanner & Rod Wrench

Nose cone for head installation

Cylinder Assembly (Pre April 2020)

ID#	Qty	400 Part #	425 Part #	Description
1	**(3)**	**05821201**	**06201001**	**Cylinder Assembly (Includes items 2-23)**
2	1	05754201	-	Barrel Assembly, Round Wire Lock
		-	06201101	Barrel Assembly, Round Wire Lock (Pre - Apr '20)
3	**(1)**	**06032901**	**06247601**	**Rod w/Piston & Head Assemblies (Includes items 4-9 & 14)**
4	1	05730101		Rod Nut Adjustable
5	1	05732001		Rod Nut Stationary
-	**(2)**	**05828002**		**Cylinder Rod Assy KFD KSD (Includes items 6-8)**
6	2	05828001		Rod 45mm 5/8" ID (Not sold separately)
7	2	84380000		209 O-Ring Buna 90
8	2	84390400		209 O-Ring Back-up Buna 90
9	**(1)**	**05852301**	**06201301**	**Piston Assembly (Includes items 10-13)**
10	1	05754101	06201401	Piston (4", 4.25")
11	1	84405400	84403852	Wear Ring Piston (4", 4.25")
12	2	84352500	84352510	Seal Piston (4", 4.25")
12-1	2	w/Seal	w/Seal	Seal Back-up
13	2	87007990		Hex Socket Set Screw Cup Point M10x1.5x8mm
13B	2	87007995		Hex Socket Set Screw Full Dog M10x1.5x10mm
14	**(2)**	**05842801**	**06201501**	**Head Assembly (Includes items 15-23)**
15	1	05729901	06201601	Head (4", 4.25")
16	2	84385000	84385230	O-Ring Buna 90 (240, 242)
17	1	84393200	84393230	O-Ring Backup Buna 90 (240, 242)
18	4	-	06201701	Lock Wire ROUND (Pre - Apr '20)
	4	03812107	-	Lock Wire ROUND
19	1	84400201		Buffer Seal Rod 45mm
19-1	1	w/Seal		Buffer Seal Back-Up Rod 45mm
20	1	84354200		Seal Rod 45mm
20-1	1	w/Seal		Seal Back-Up Rod 45mm
22	2	84401205		PTFE Wear Ring Rod 45mm (Blue)
23	1	84426605		Rod Wiper 45mm
-	**-**	06076701	06201801	**Cylinder Seal Kit (Includes items 4, 7-8, 11-13, 16-23)**
				Tools
-	-	10315001		Spanner Wrench for Piston 4.25"
-	-	07306001		Spanner & Rod Wrench for Head Assembly
-	-	07481501		Rod Nose Cone (45 mm = 1.772")

Manifold Assembly - ORFS (Post April 2019)

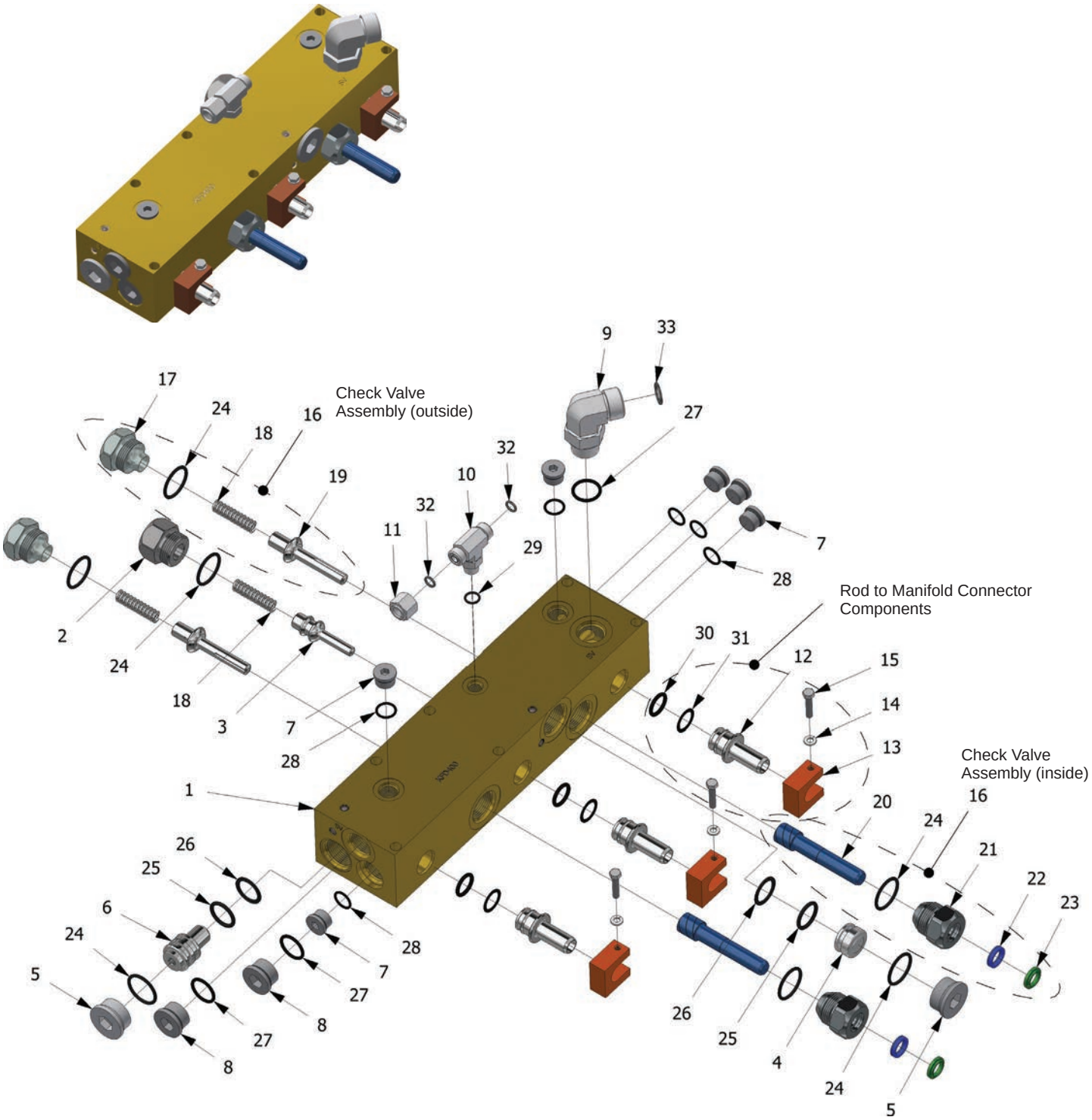

10439002

Use hydraulic oil or Vaseline to lubricate seals.
Do NOT use grease!
Do NOT use Teflon tape!

Manifold Assembly - ORFS (Post April 2019)

ID#	Qty	400 Part #	425 Part #	Description
-	**(2)**	**10439002**	**10426803**	**Manifold Assembly (Includes items 1-33)**
1	1	05849401	06202101	Manifold Body
2	1	05849001		CONTROL VALVE SPRING END CAP
3	1	05793401		CONTROL VALVE CHECK VALVE
4	1	05793301		CONTROL VALVE PISTON
5	2	84687900		16 HP5ON-S HOLLOW HEX PLUG M O-RING HEX SOCKET
6	1	05849801		POPPET CONTROL VALVE
7	6	84687500		08 HP5ON-S HOLLOW HEX PLUG M O-RING
8	2	84687700		12 HP5ON-S HOLLOW HEX PLUG M O-RING
9	1	84694022		12 C5OLO-S 12-12 STRAIGHT THREAD ELBOW FACE SEAL
10	1	84694035		6 S5OLO-S 6-6-6 STRAIGHT THREAD BRANCH TEE FACE SEAL
11	1	84694057		6 FNL-S FNL 6 STEEL CAP
12	3	05828201		MANIFOLD TO ROD CONNECTOR BUSHING
13	3	05828301		ROD TO MANIFOLD CONNECTOR RETAINER
14	3	87075500		WASHER LOCK 6MM
15	3	87004101		BOLT HEX GR8.8 6MMX30MM FULL THREAD
18	1	84453400		Spring Check Valve External Large
16	**(2)**	**07335401**		**Check Valve Assembly (includes items 17-24)**
17	1	05754801		CHECK VALVE SPRING END CAP KFD
18	1	84453400		Spring Check Valve External Large
19	1	01766901		CHECK VALVE
20	1	06970701		CHECK VALVE PLUNGER
21	1	06969801		PLUNGER END CAP FITTED WITH BUSHING
22	1	84352200		SEAL ROD 5/8" CHECK VALVE EXTERNAL
23	1	84426800		PLUNGER WIPER CHECK VALVE EXTERNAL 5/8"
24	1	84387800		916 O-RING Buna 90
24	5	84387800		916 O-RING Buna 90
25	2	84381200		213 O-Ring Buna 90
26	2	84391200		8-213 Back-up Buna 90
27	3	84387400		912 O-RING BUNA 90
28	6	84387000		908 O-RING BUNA 90
29	1	84386800		906 O-Ring Buna 90
30	3	84380200		210 O-Ring Buna 90
31	3	84390600		210 Back-up Buna 90
32	2	84375210		#6 O-RING 016 N1490-90 FACE SEAL NITRILE
33	1	84375166		#12 O-RING 016 N1490-90 FACE SEAL NITRILE
-	**-**	06074501		**Manifold Seal Kit (Includes Items 22-33)**

Manifold Assembly - JIC (Pre May 2019)

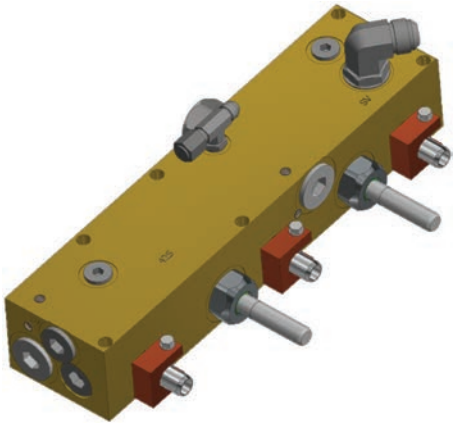

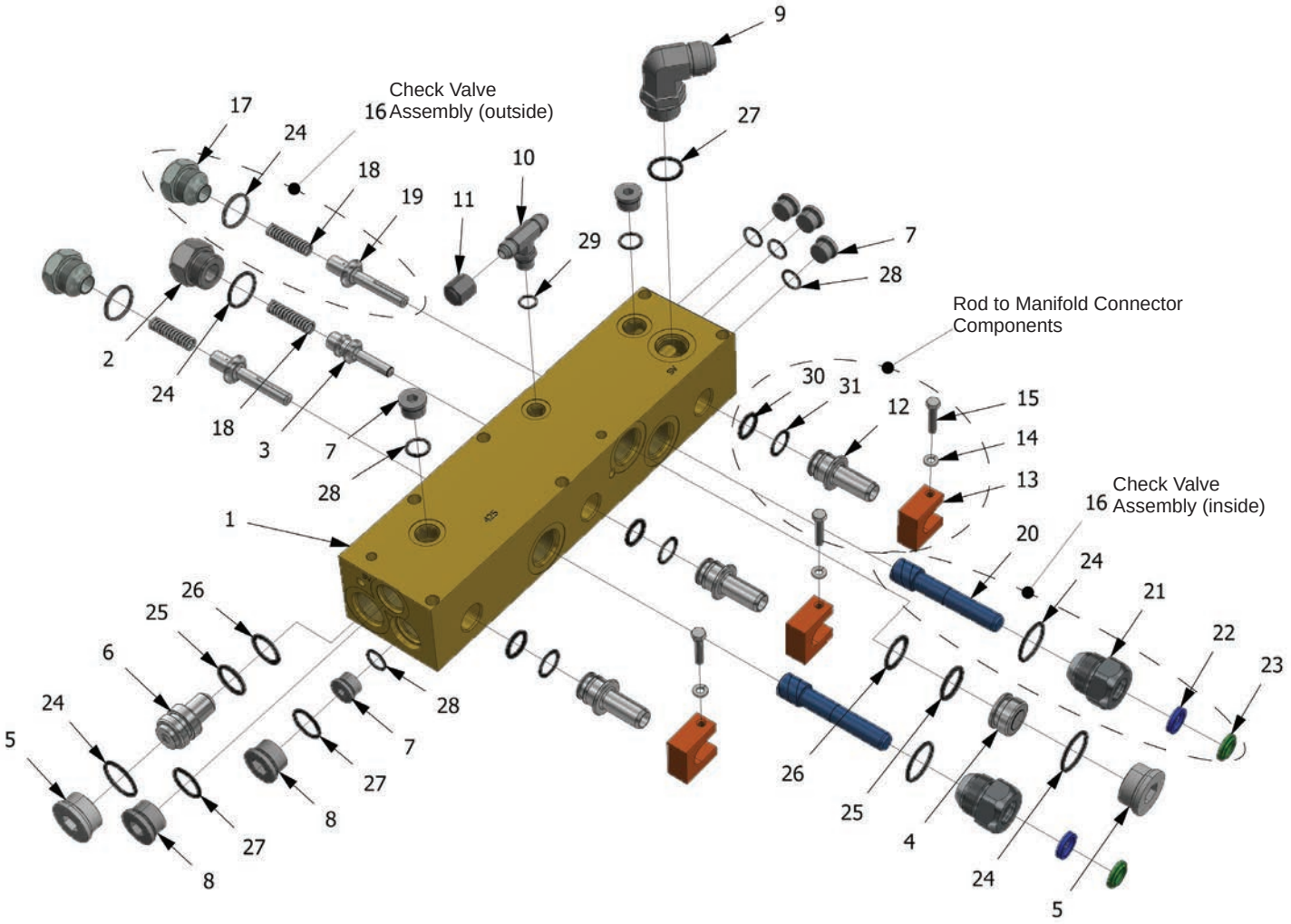

06202003

Use hydraulic oil or Vaseline to lubricate seals.
Do NOT use grease!
Do NOT use Teflon tape!

Manifold Assembly - JIC (Pre May 2019)

ID#	Qty	400 Part #	425 Part #	Description
-	**(2)**	**05849402**	**06202001**	**Manifold Assembly (Includes items 1-31)**
1	1	05849401	06202101	Manifold Body
2	1	05849001		CONTROL VALVE SPRING END CAP
3	1	05793401		CONTROL VALVE CHECK VALVE
4	1	05793301		CONTROL VALVE PISTON
5	2	84687900		16 HP5ON-S HOLLOW HEX PLUG M O-RING HEX SOCKET
6	1	05849801		POPPET CONTROL VALVE
7	6	84687500		08 HP5ON-S HOLLOW HEX PLUG M O-RING
8	2	84687700		12 HP5ON-S HOLLOW HEX PLUG M O-RING
9	1	84691500		12 C5OX-S STRAIGHT THREAD ELBOW MJIC X ADJ
10	1	84692000		06 S5OX-S STRAIGH THREAD TEE MJIC X MJIC X ADJ O-RING
11	1	84703300		06 FNTX-S 3/8" CAP NUT
12	3	05828201		MANIFOLD TO ROD CONNECTOR BUSHING
13	3	05828301		ROD TO MANIFOLD CONNECTOR RETAINER
14	3	87075500		WASHER LOCK 6MM
15	3	87004101		BOLT HEX GR8.8 6MMX30MM FULL THREAD
16	**(2)**	**07335401**		**Check Valve Assembly (includes items 17-24)**
17	1	05754801		CHECK VALVE SPRING END CAP KFD
18	1	84453400		Spring Check Valve External Large
19	1	01766901		CHECK VALVE
20	1	06970701		CHECK VALVE PLUNGER
21	1	06969801		PLUNGER END CAP FITTED WITH BUSHING
22	1	84352200		SEAL ROD 5/8" CHECK VALVE EXTERNAL
23	1	84426800		PLUNGER WIPER CHECK VALVE EXTERNAL 5/8"
24	1	84387800		916 O-RING Buna 90
24	5	84387800		916 O-RING Buna 90
25	2	84381200		213 O-Ring Buna 90
26	2	84391200		8-213 Back-up Buna 90
27	3	84387400		912 O-RING BUNA 90
28	6	84387000		908 O-RING BUNA 90
29	1	84386800		906 O-Ring Buna 90
30	3	84380200		210 O-Ring Buna 90
31	3	84390600		210 Back-up Buna 90
-	**-**	06074501		**Manifold Seal Kit (Includes Items 22-31)**

Front Manifold Fitting Configuration

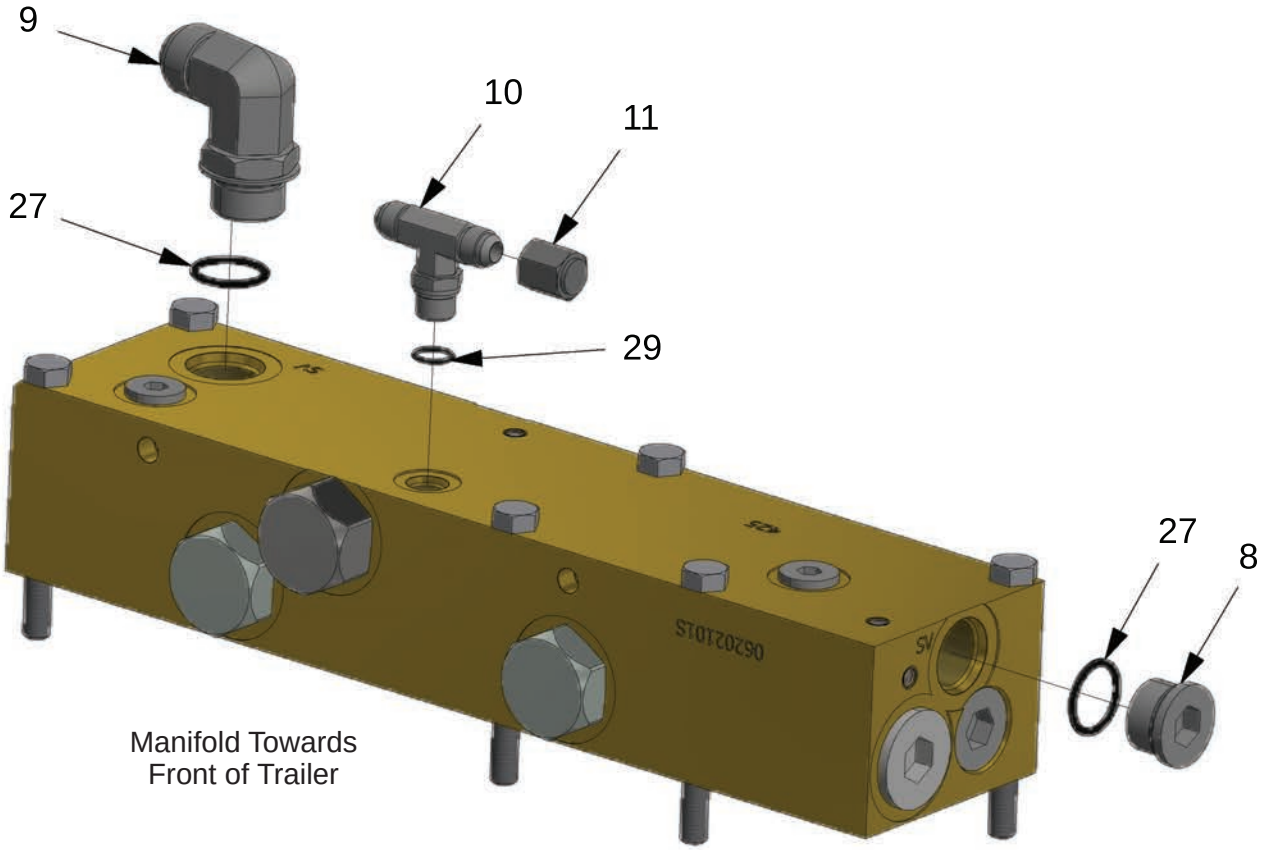

Use hydraulic oil or Vaseline to lubricate seals.
Do NOT use grease!
Do NOT use Teflon tape!

06202004

Rear Manifold Fitting Configuration

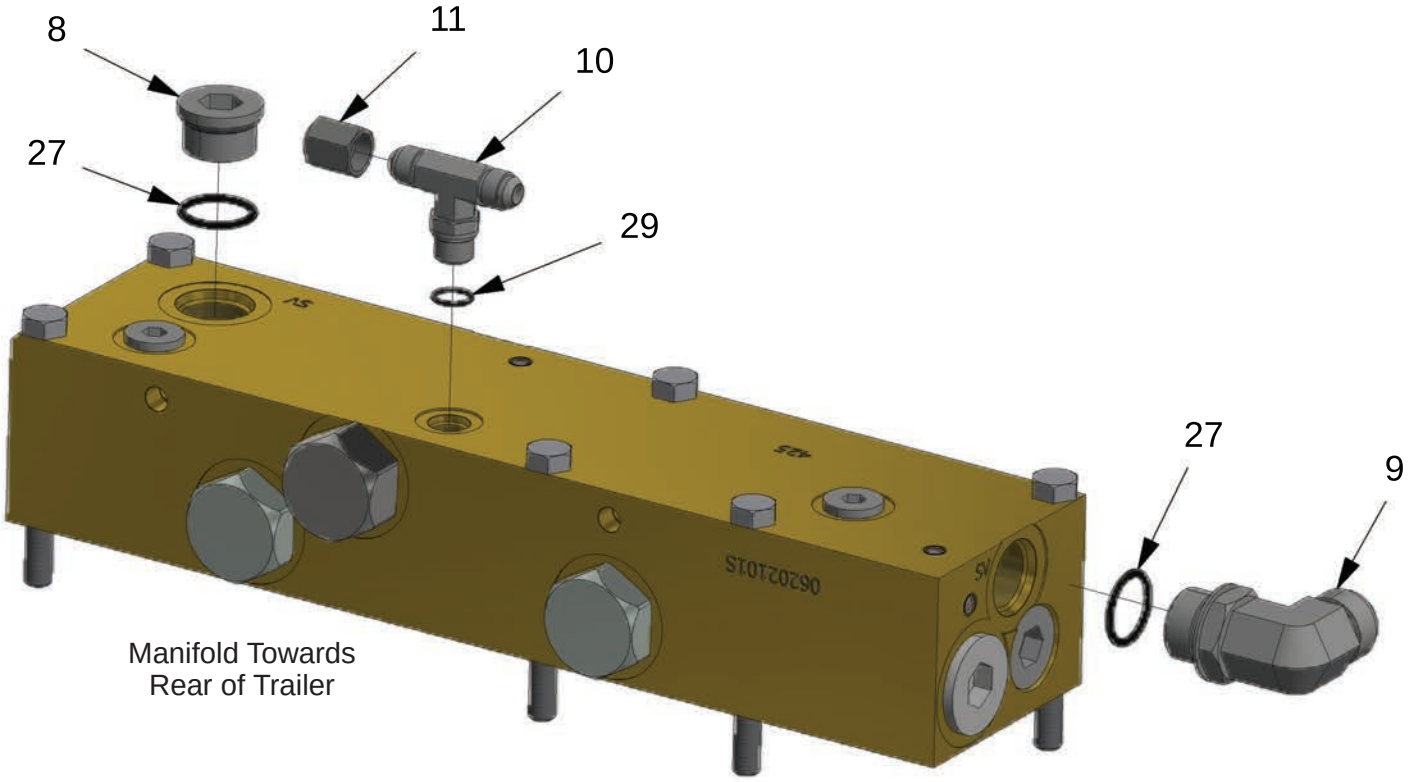

Use hydraulic oil or Vaseline to lubricate seals.
Do NOT use grease!
Do NOT use Teflon tape!

06202004

Hydraulic Tubing - ORFS (May 2019 - Present)

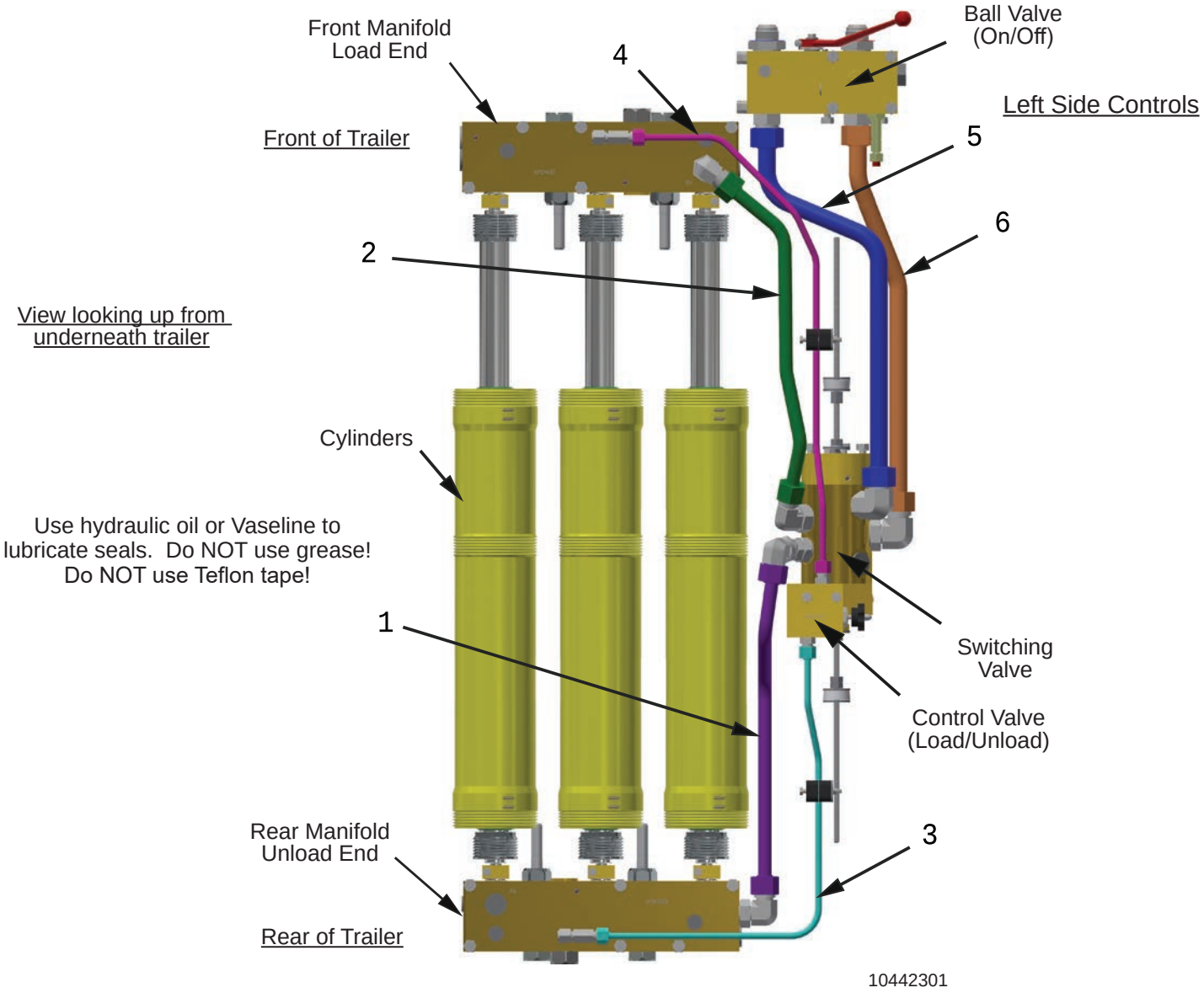

Hydraulic Tubing - ORFS (May 2019 - Present)

ID#	Qty	Part #	Description
1	1	10336901	TUBE ASSY KFD 3/4" FACE SEAL SWV TO UNLOAD MANIFOLD
		10848701	TUBE ASSY KFD FSL SWV TO UNLOAD MANIFOLD -Use with SWV 10436402
2	1	10336801	TUBE ASSY KFD 3/4" FACE SEAL SWV TO LOAD MANIFOLD
3	1	10336701	TUBE ASSY KFD 3/8" FACE SEAL CTV ACTUATOR TO UNLOAD MANIFOLD
4	1	10336601	TUBE ASSY KFD 3/8" FACE SEAL CTV ACTUATOR TO LOAD MANIFOLD
5	1	10337101	TUBE ASSY KFD FACE SEAL BV TO SWV
6	1	10337001	TUBE ASSY KFD FACE SEAL BV TO SWV

Hydraulic Tubing - Truck Body - ORFS (May 2019 - Present)

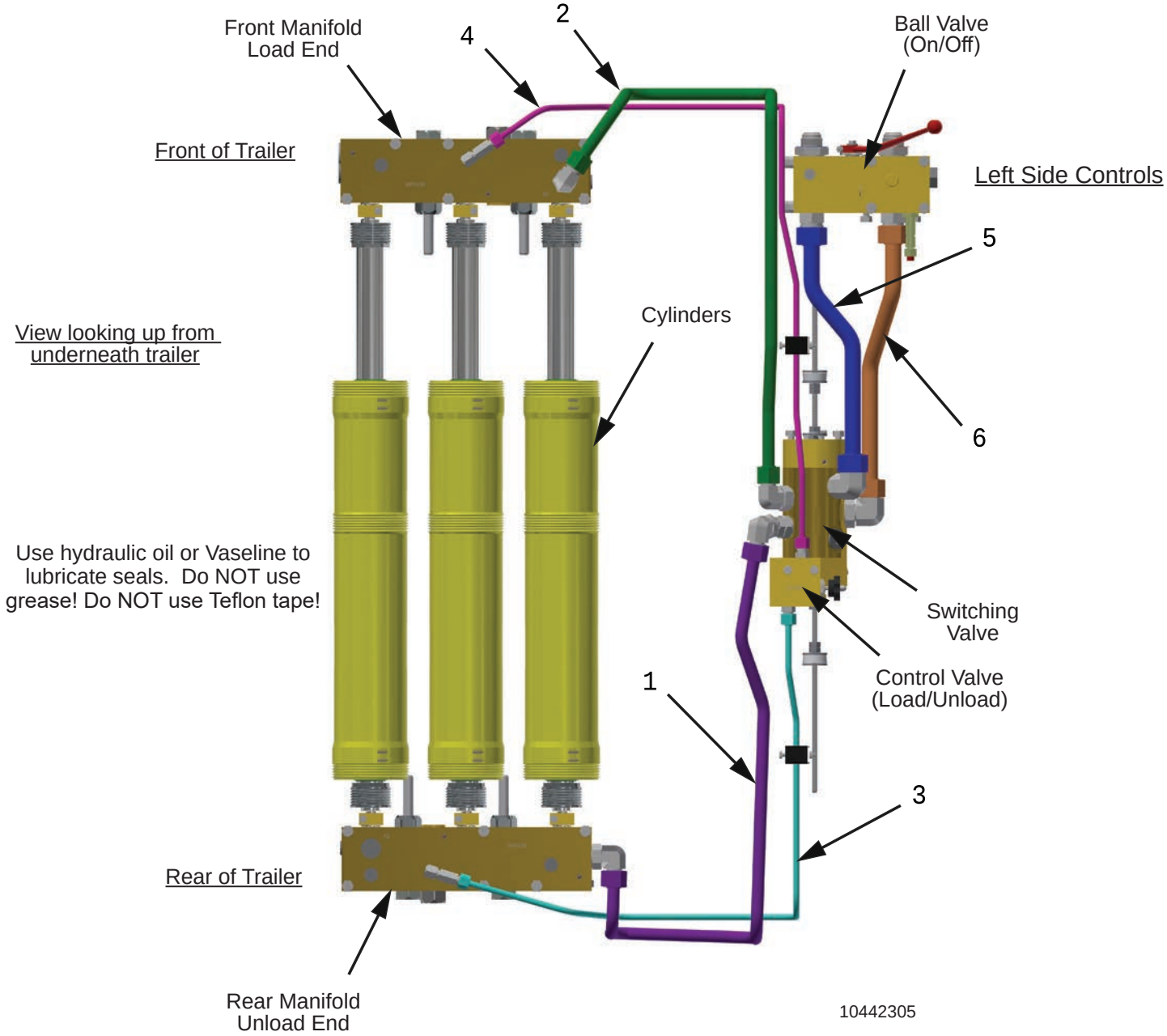

Hydraulic Tubing - Truck Body - ORFS (May 2019 - Present)

ID#	Qty	Part #	Description
1	1	10337601	TUBE ASSY KFD 3/4 TB #10338101 FACE SEAL SWV TO UNLOAD MANIFOLD
2	1	10337501	TUBE ASSY KFD 3/4 TB #10338101 FACE SEAL SWV TO LOAD MANIFOLD
3	1	10337401	TUBE ASSY KFD 3/8 TB #10338101 FACE SEAL CTV TO UNLOAD MANIFOLD
4	1	10337301	TUBE ASSY KFD 3/8 TB #10338101 FACE SEAL CTV TO LOAD MANIFOLD
5	1	10337801	TUBE ASSY KFD 1.0 TB #10338101 FACE SEAL RETURN LINE TO SWV
6	1	10337701	TUBE ASSY KFD 1.0 TB #10388101 FACE SEAL PRESSURE LINE TO SWV

Hydraulic Tubing - JIC (Pre - May 2019)

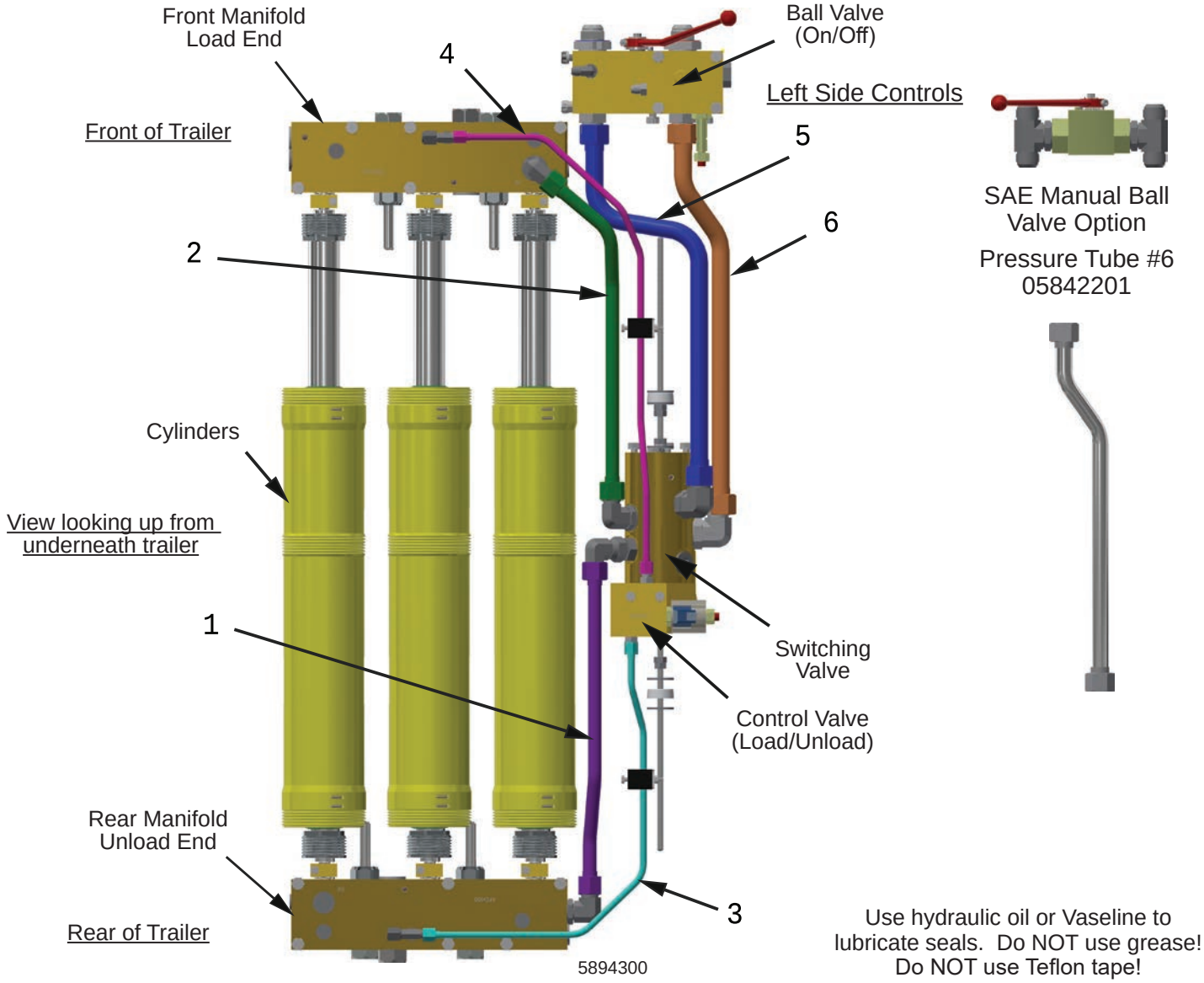

Use hydraulic oil or Vaseline to lubricate seals. Do NOT use grease! Do NOT use Teflon tape!

Hydraulic Tubing - JIC (Pre - May 2019)

ID#	Qty	Elec/Man On/Off Valve Part #	Manual Ball Valve Part #	Description
-	**-**	**06085501**	**06085401**	**Hydraulic Tube Kit (Includes items 1-6)**
1	1	05852401		Switching Valve to Unload End Manifold 3/4"
2	1	05852501		Switching Valve to Load End Manifold 3/4"
3	1	05852601		Control (Load/Unload) Valve to Unload End Manifold 3/8"
4	1	05852701		Control Valve (Load/Unload) to Load End Manifold 3/8"
5	1	05842501		Switching Valve Return to On/Off Valve (Ball Valve) 1"
6	1	05842401	05842201	Switching Valve Pressure to On/Off Valve (Ball Valve) 1"

Hydraulic Tubing - Truck Body - JIC (Pre - May 2019)

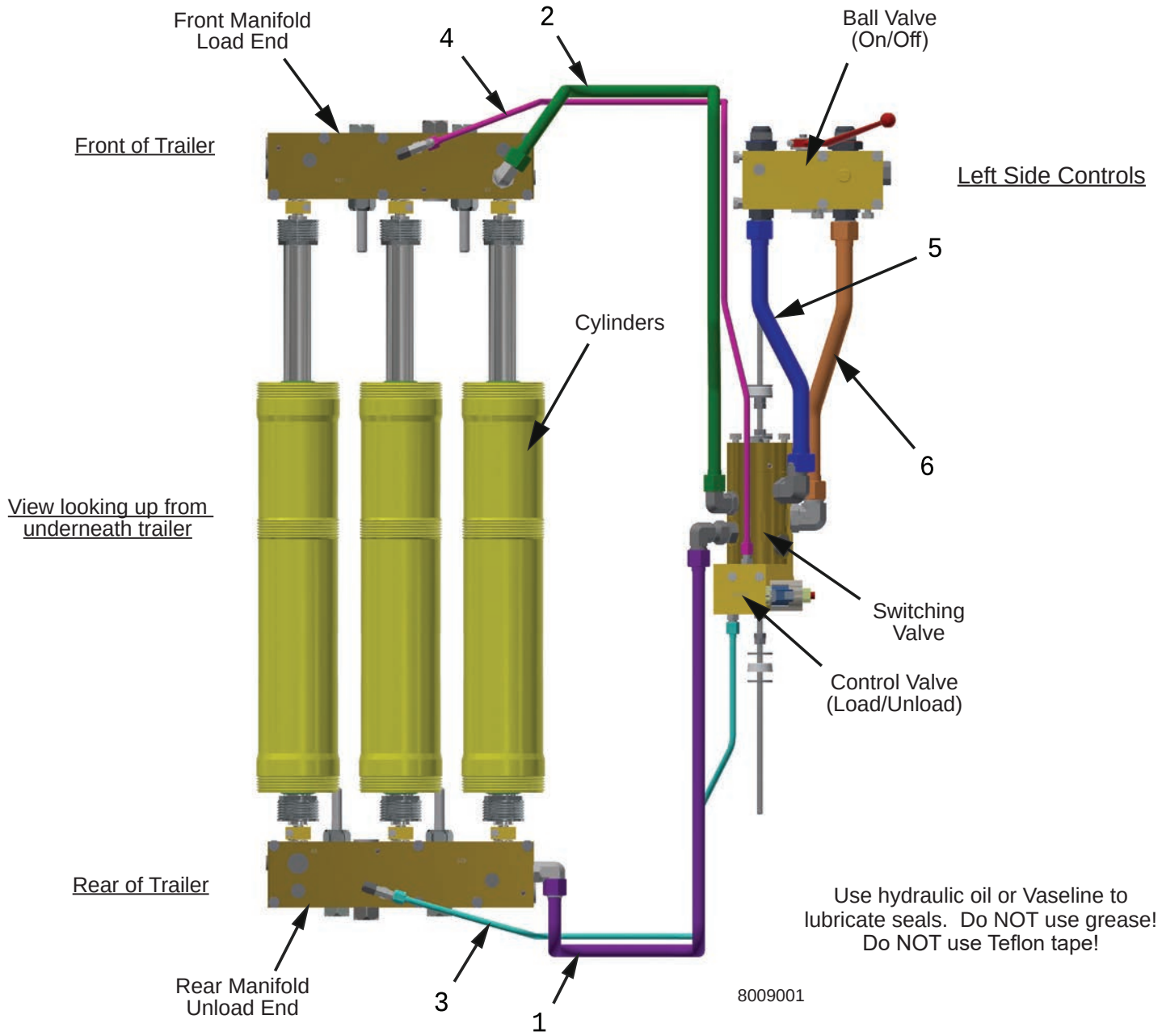

Hydraulic Tubing - Truck Body - JIC (Pre - May 2019)

ID#	Qty	Part #	Description
1	1	07095801	TUBE ASSY KFD 3/4" SWV TO REAR MANIFOLD
2	1	07095701	TUBE ASSY KFD 3/4" SWV TO FRONT MANIFOLD
3	1	07096001	TUBE ASSY KFD 3/8" TB CV TO REAR MANIFOLD
4	1	07095901	TUBE ASSY KFD-TB 3/8" CV TO REAR MANIFOLD
5	1	07095601	TUBE ASSY KFD 1" RTN BV-SWV
6	1	07095501	TUBE ASSY KFD-TB 1" PRESSURE FILTER

Hydraulic Tube Clamp 3/8” & 3/4”

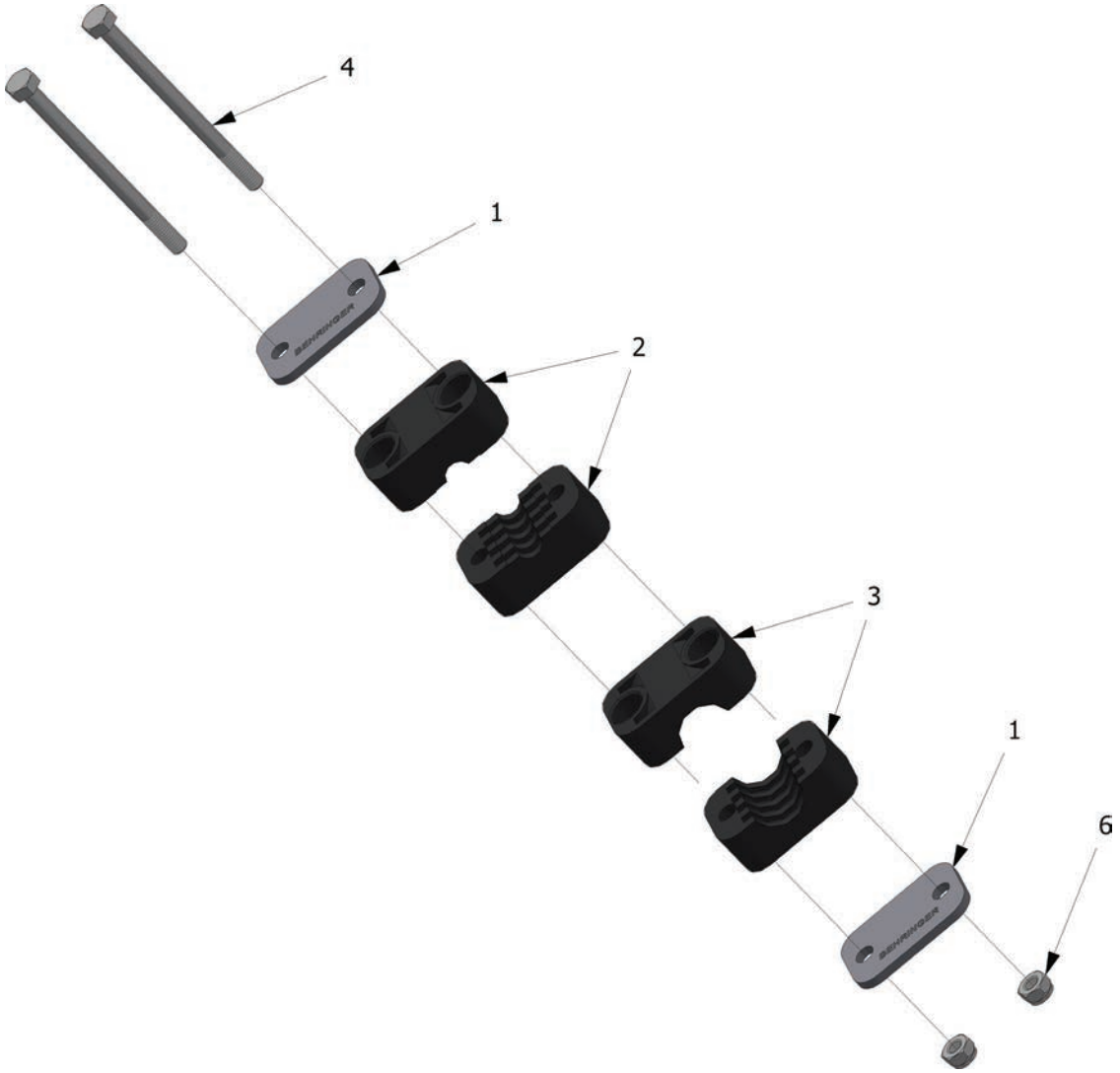

Hydraulic Tube Clamp 3/8” & 3/4”

ID #	Qty	Part #	Description
-	**-**	**10426102**	**TUBE CLAMP ASSY 3/8” & 3/4” TUBE KFD**
1	2	84751200	Cover Plate COP-03
2	2	84750100	Clamp 3/8" Tube 3038-PP Special
3	2	84750200	Clamp 3/4" Tube 3190-PP
4	2	87004600	Bolt Hex GR8.8 6mmx85mm
5	2	86551000	Washer Flat 1/4"
6	2	87100500	Nut Hex Nylock 6mm

Hydraulic Tube Clamp 3/8”

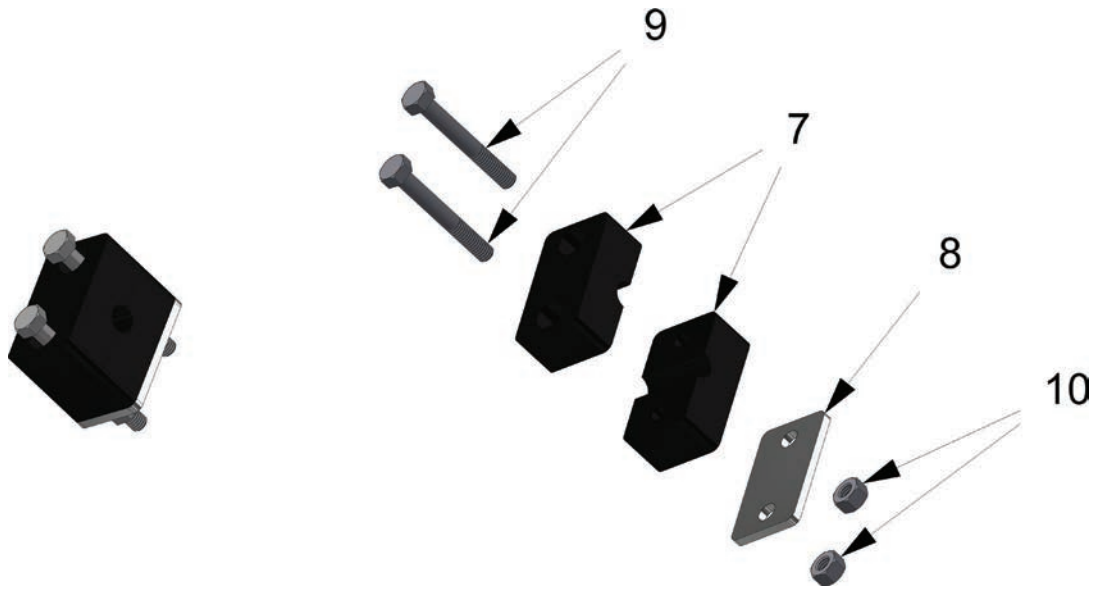

Hydraulic Tube Clamp 3/8”			
ID#	**Qty**	**Part #**	**Description**
-	**-**	**10426101**	**TUBE CLAMP ASSY 3/8” TUBE KFD**
7	2	84750100	Tube Clamp 3/8” Group 3 1038-PP
8	1	84751200	Cover Plate COP-3
9	2	87004510	Bolt Hex GR 8.8 M6x1x55mm
10	2	87100500	Nut Hex Nylock M6x1 Zinc

Switching Valve & Control Valve Assembly - ORFS (Post April 2019)

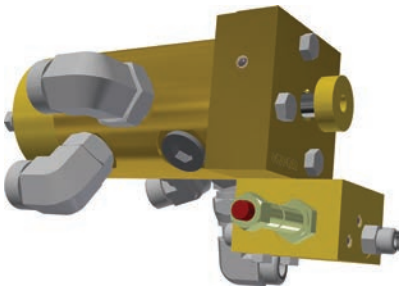

Electric

Switching Valve Assembly w/Control Valve			
		Control Valve Cartridge	
		Electric 85108800	Manual 85105200
Controls	Left Side	10427101	10436401
	Right Side		10436402

Deutsch Connectors
Sold Separately
(Contact KEITH for information)

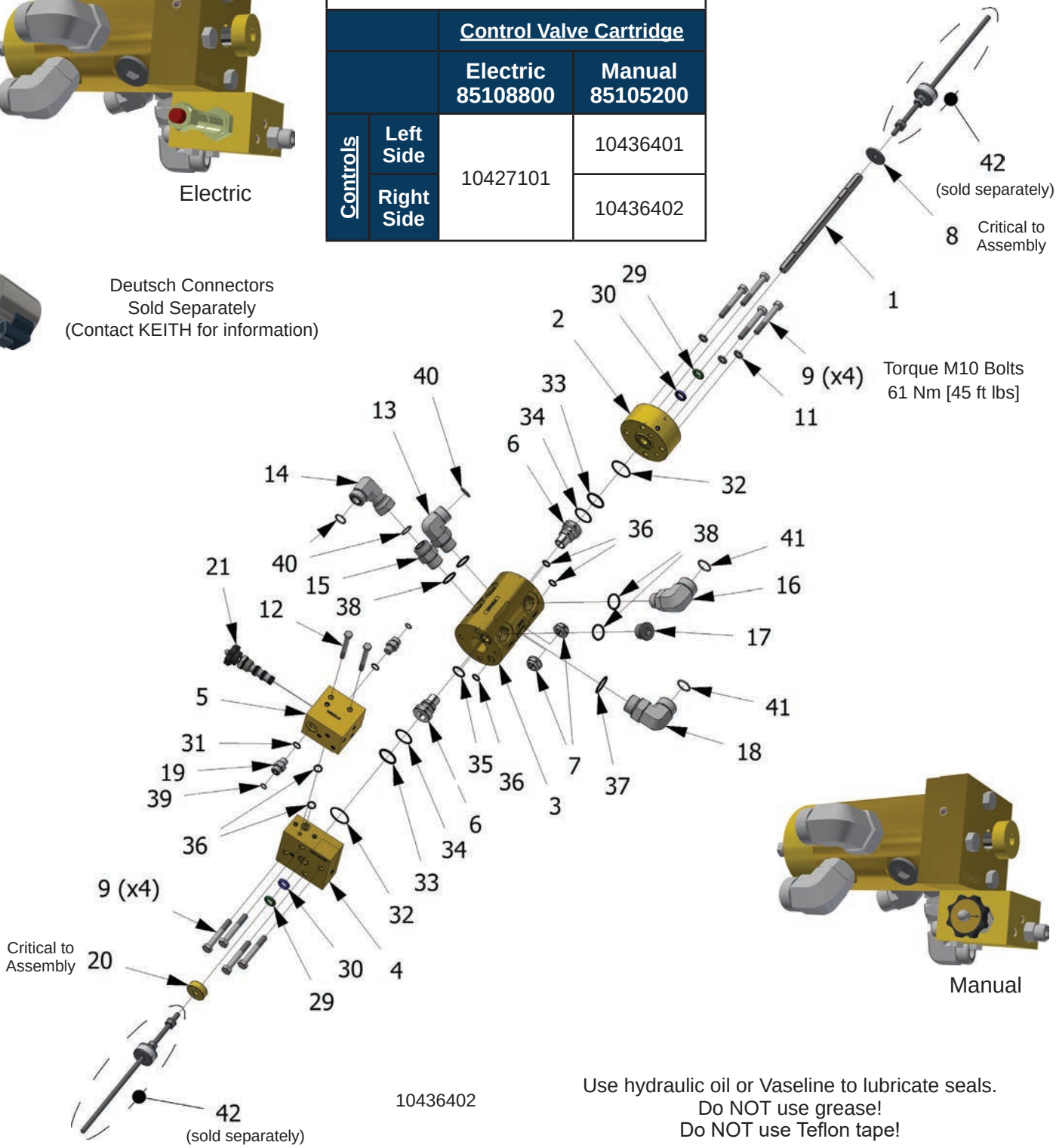

Manual

Use hydraulic oil or Vaseline to lubricate seals.
Do NOT use grease!
Do NOT use Teflon tape!

Switching Valve & Control Valve Assembly - ORFS (Post April 2019)

ID#	Qty	Left Side Part #	Right Side Part #	Description
-	**(1)**	**See Table**	**See Table**	**Switching Valve Assembly Metric (Includes Items 1-41)**
1	1	01335502		Control Rod Metric
2	1	04504801		Left End Cap Metric KFD
3	1	04504602		Switching Valve Body Metric KFD
4	1	06204201		Right End Cap Metric KFD
5	1	06204301	07525001	Control Valve Actuator Housing
6	2	03718901		Poppet Valve w/ Actuator Piston
7	2	03718801		Poppet Valve, Center
8	1	86553500		Washer Fender 3/8"X1-1/2" (Critical for Assembly)
9	5	87009000		Bolt Hex Head M10x1.5x65mm
10	3	87009750		Bolt Hex Head M10x1.5x75mm
11	3	87076500		Washer Lock M10
12	2	87006300		Bolt Hex Head M8x1.25x65mm
13	1	84694022		-12 C5OLO-S 12-12 STRAIGHT THREAD ELBOW FACE SEAL
14	1	84694050		-12 C6LO-S -12-12 SWIVEL NUT ELBOW FACE SEAL
15	1	84703914		12 F5OLO-S 12-12 Straight Thread Conn. Face Seal (Sept 2020 - Present)
		84703958		12 V5OLO-S 12-12 45 DEG Straight Thread Elbow Face Seal (Pre Sept 2020)
16	1	84694028		-16-12 C5OLO-S 16-12 STRAIGHT THREAD ELBOW FACE SEAL
17	1	84687700		12 HP5ON-S HOLLOW HEX PLUG M O-RING
18	1	84703930		-16 C5OLO-S -16 STRAIGHT THREAD ELBOW FACE SEAL
19	2	84703910		6 F5OLO-S 6-6 STRAIGHT THREAD CONN. FACE SEAL
20	1	02552101		Limit Cap (Critical for Assembly)
21	**(1)**	**85108800**		**Cartridge Valve, Solenoid, Electric**
		85105200		**Cartridge Valve, MRV4-10-K-O-VIC**
-	**-**	**85108798**		**Seal Kit for Cartridge Valves**
-	**-**	**06076601**		**Seal Kit Switching Valve KFD (Includes items 29-41 & 85108798)**
29	2	84426800		Rod Wiper 5/8” Snap In
30	2	84352200		Rod Seal 5/8"
31	2	84386800		906 O-Ring Buna 90
32	2	84378200		126 O-Ring Buna 90
33	2	84382200		216 O-Ring Buna 90
34	2	84391600		216 Back-up Buna 90
35	1	84377000		117 O-Ring Buna 90
36	5	84376200		111 O-Ring Buna 90
37	1	84387800		916 O-Ring Buna 90
38	4	84387400		912 O-Ring Buna 90
39	2	84375210		#6 O-RING 2-012 #6 FACE SEAL NITRILE
40	3	84375166		#12 O-RING 018 N1490-90 #12 FACE SEAL NITRILE
41	2	84375167		#16 O-RING 021 N1490-90 #16 FACE SEAL NITRILE
42	**(2)**	**06076802**		**Rod Threaded Assembly- Metric KFD (See Threaded Rod Detail)**

Switching Valve & Control Valve Assembly - JIC (Pre May 2019)

Switching Valve Assembly w/Control Valve			
		Control Valve Cartridge	
		Electric 85108800	Manual 85105200
Controls	Left Side	05852102	05852104
	Right Side	05852105	05852106

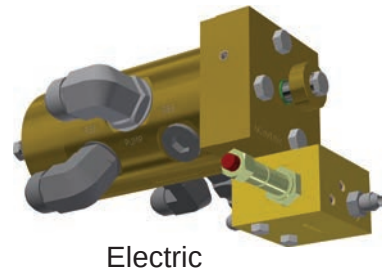

Electric

Deutsch Connectors
Sold Separately
(Contact KEITH for information)

09485801 Switching Valve Assembly without configured control valve (items 5, 12, 19, 21, 31, 36)

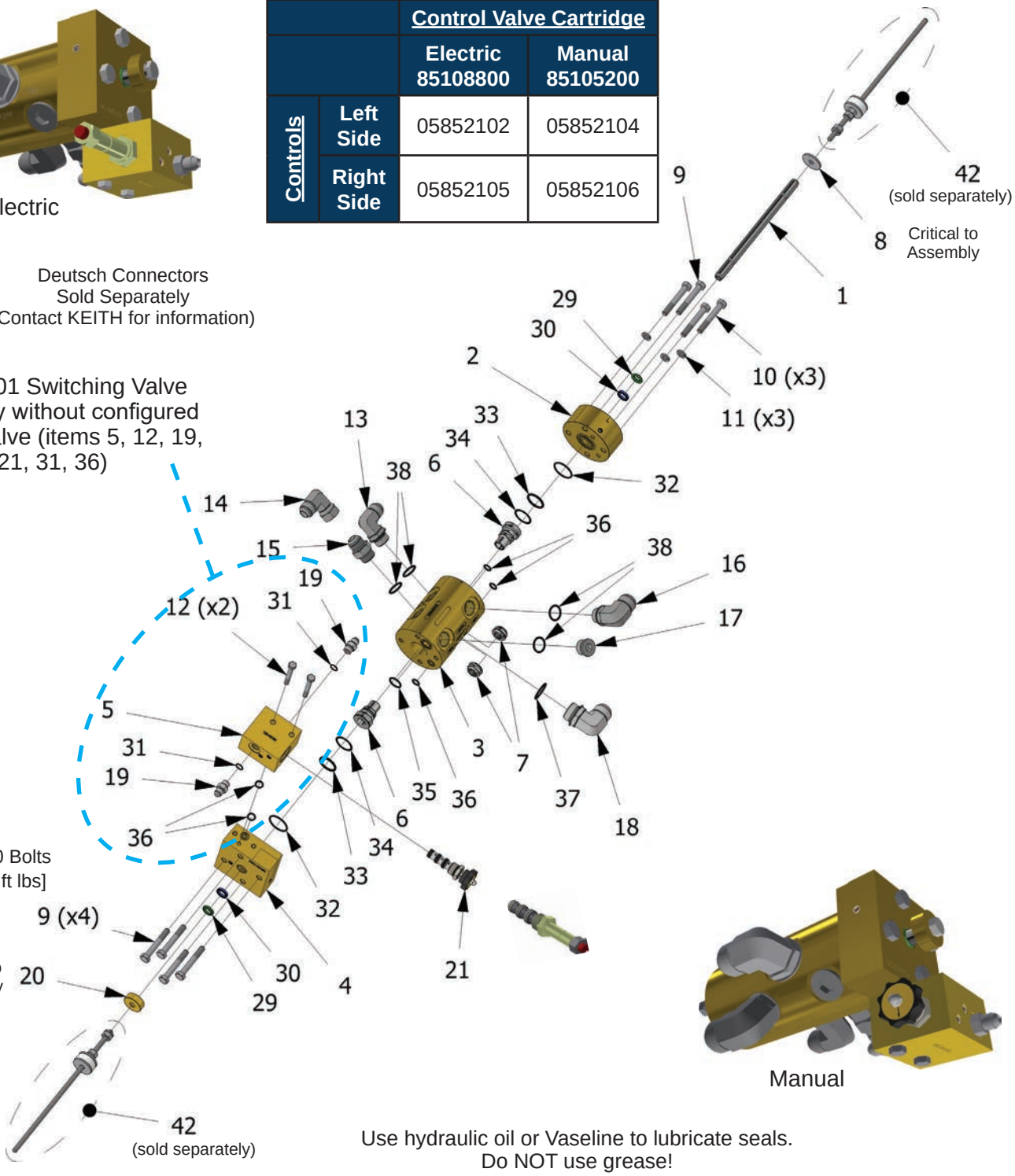

Manual

Use hydraulic oil or Vaseline to lubricate seals.
Do NOT use grease!
Do NOT use Teflon tape!

Switching Valve & Control Valve Assembly - JIC (Pre May 2019)

ID#	Qty	Left Side Part #	Right Side Part #	Description
-	**(1)**	**See Table**	**See Table**	**Switching Valve Assembly Metric (Includes Items 1-38)**
1	1	01335502		Control Rod Metric
2	1	04504801		Left End Cap Metric KFD
3	1	04504602		Switching Valve Body Metric KFD
4	1	06204201		Right End Cap Metric KFD
5	1	06204301	07525001	Control Valve Actuator Housing
6	2	03718901		Poppet Valve w/ Actuator Piston
7	2	03718801		Poppet Valve, Center
8	1	86553500		Washer Fender 3/8"X1-1/2" (Critical for Assembly)
9	5	87009000		Bolt Hex Head M10x1.5x65mm
10	3	87009750		Bolt Hex Head M10x1.5x75mm
11	3	87076500		Washer Lock M10
12	2	87006300		Bolt Hex Head M8x1.25x65mm
13	1	84691500		12 C5OX-S Straight Thread Elbow MJIC X ADJ
14	1	84688600		12 C6X-S Swivel Elbow MJIC X FJIC
15	1	84685000		12 F5OX-S Straight Thread Connector MJIC X M O-RING
16	1	84691700		16-12 C5OX-S Straight Thread Elbow MJIC X ADJ O-RING
17	1	84687700		12 HP5ON-S Hollow Hex Plug M O-RING
18	1	84691800		16 C5OX-S Straight Thread Elbow
19	2	84684000		06 F5OX-S Straight Thread Connector MJIC X M
20	1	02552101		Limit Cap (Critical for Assembly)
21	**(1)**	**85108800**		**Cartridge Valve, Solenoid, Electric (Includes items 22-28)**
		85105200		**Cartridge Valve, MRV4-10-K-O-VIC, Manual (Includes items 22-28)**
-	**-**	**85108798**		**Seal Kit for Cartridge Valves**
-	**-**	**06076601**		**Seal Kit Switching Valve KFD (Includes items 29-38 & 85108798)**
29	2	84426800		Rod Wiper Snap In 5/8” (Nov 2014 - Present)
		84427200		Rod Wiper Canned 5/8” ROD 4700625 (Pre Nov 2014)
30	2	84352200		Rod Seal 5/8"
31	2	84386800		906 O-Ring Buna 90
32	2	84378200		126 O-Ring Buna 90
33	2	84382200		216 O-Ring Buna 90
34	2	84391600		216 Back-up Buna 90
35	1	84377000		117 O-Ring Buna 90
36	5	84376200		111 O-Ring Buna 90
37	1	84387800		916 O-Ring Buna 90
38	4	84387400		912 O-Ring Buna 90
42	**(2)**	**06076802**		**Rod Threaded Assembly- Metric KFD (See Threaded Rod Detail)**

Threaded Rod Assembly

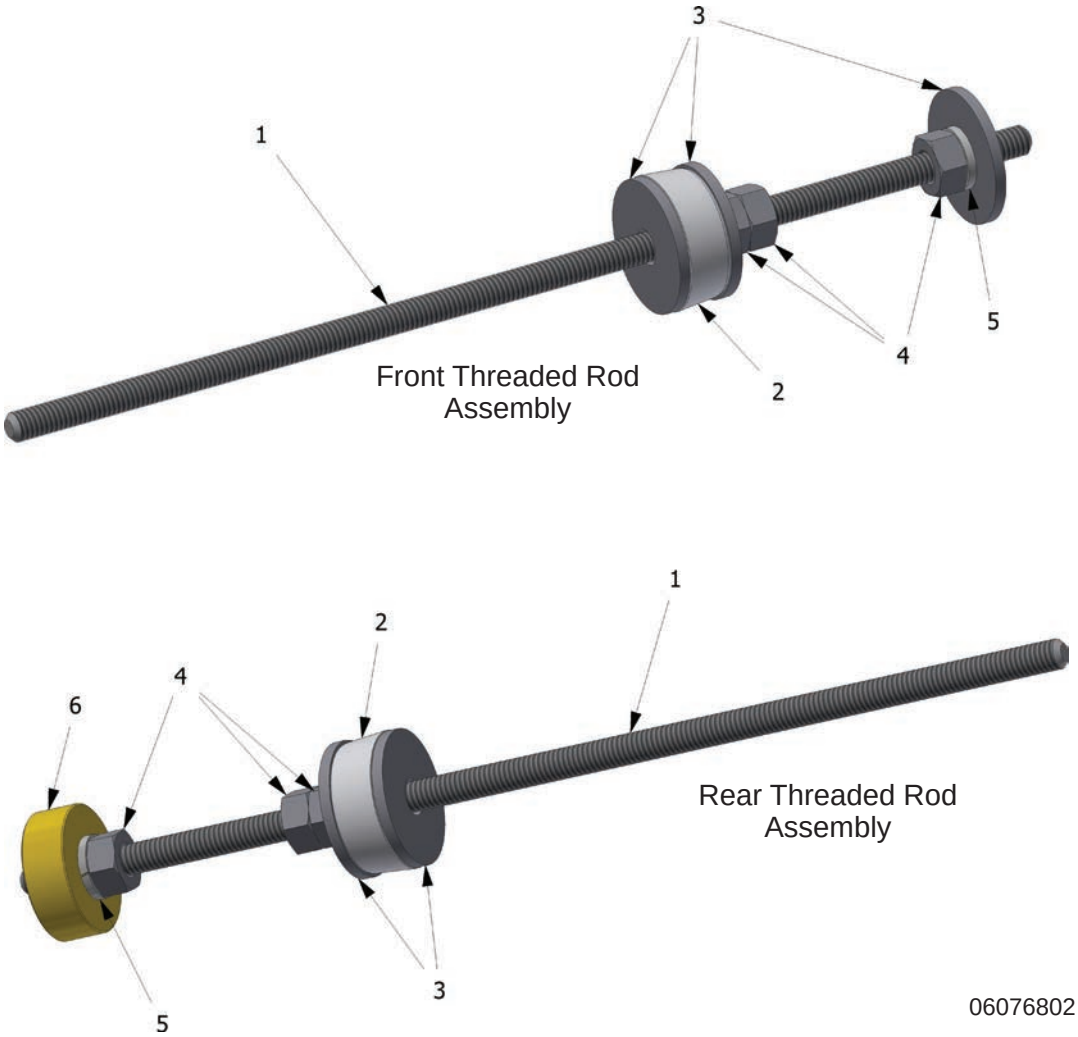

Threaded Rod Assembly

ID#	Qty	Part #	Description
-	**(2)**	**06076802**	**Rod Threaded Assembly-Metric KFD (Includes items 1-5)**
1	2	87150500	Threaded Rod 10mmx1.5x12-1/4”
2	2	83217500	Switching Valve Grommet
3	5	86553500	Washer Large OD 3/8"
4	6	87101500	Nut Hex M10x1.5
5	2	87076510	Washer Lock High Collar M10 Zinc
6	1	02552101	Limit Cap

Handle Assemblies

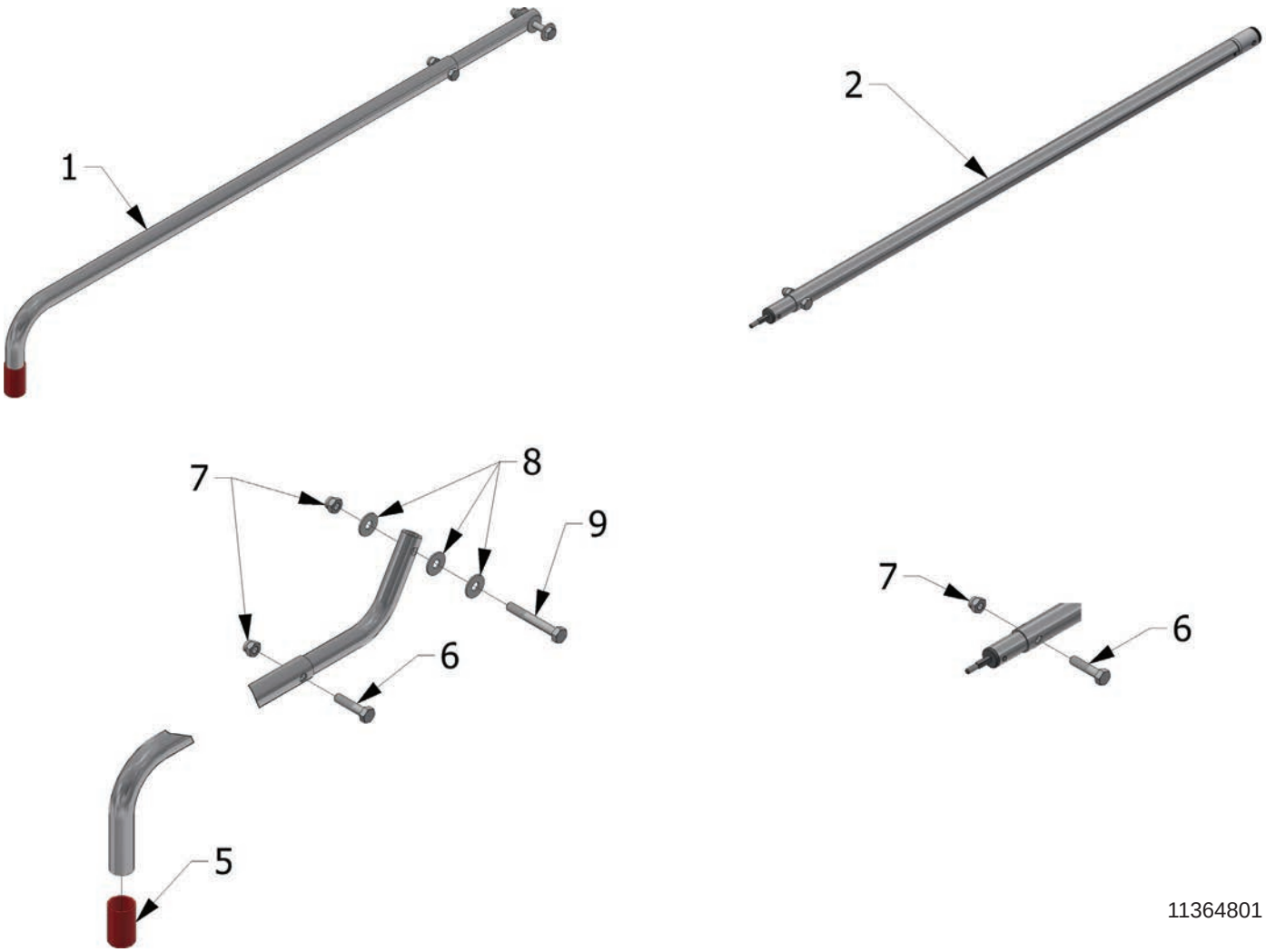

Handle Assemblies

ID#	Qty	Part #	Description
1	**(1)**	**11262701**	**Telescoping Ball Valve Handle Assembly (Includes items 5-9)**
2	**(1)**	**11263101**	**Telescoping 33-59" Rotary Control Valve Handle Assembly (Includes items 6-7)**
5	1	85711565	ROUND END CAP - RED - .875" ID X 1.5" LONG FOR HANDLES
6	1	87005950	BOLT HEX 8.8 8-1.25MM X 35MM ZN
7	2	87101000	NUT HEX NYLOCK 8MM-1.25
8	3	86552500	WASHER FLAT 5/16" ZINC
9	1	87006200	BOLT HEX 8.8 8-1.25MM X 60MM ZN

Ball Valve (On/Off) Assembly - Manual - JIC & ORFS

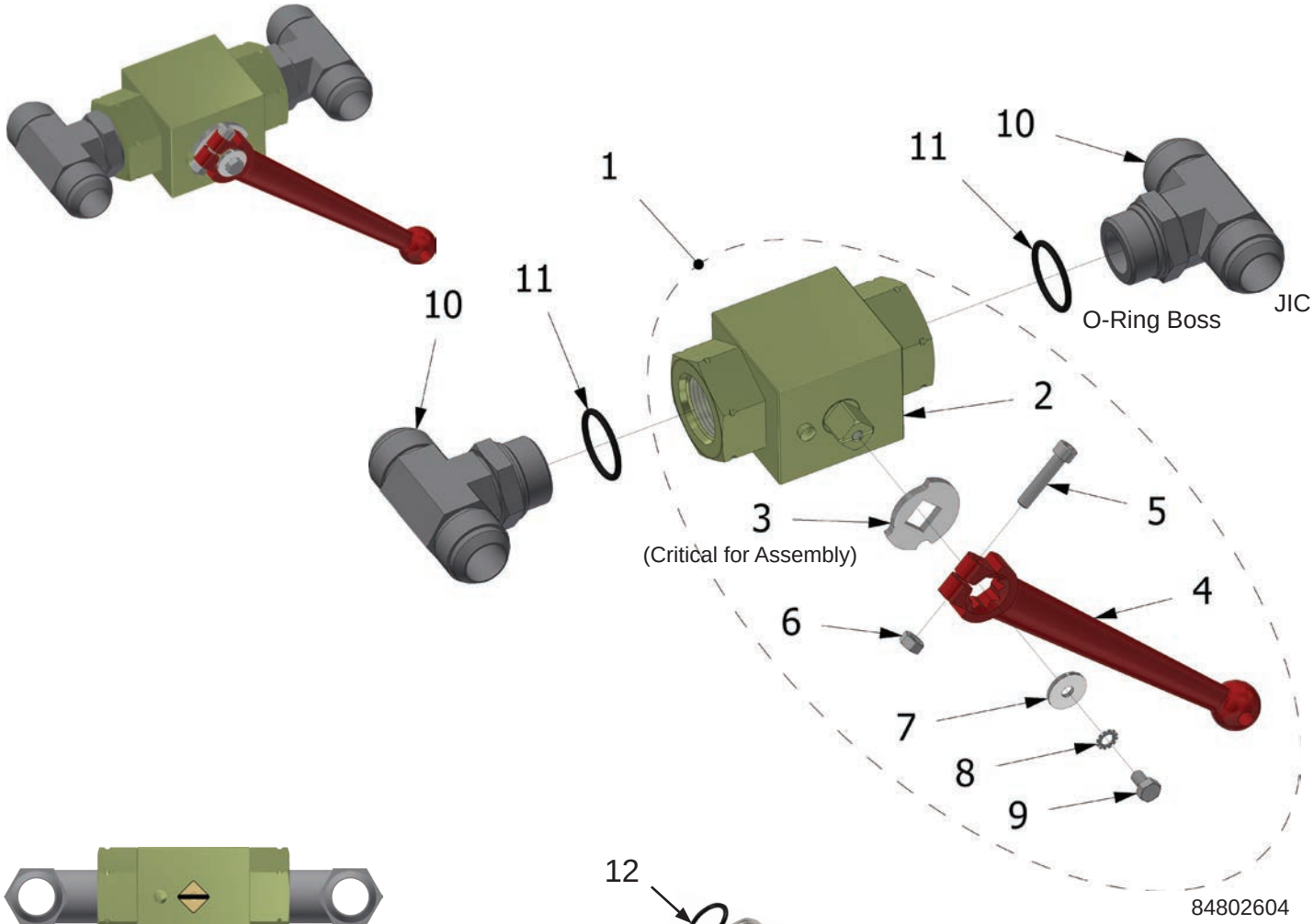

Open - Off Position

Closed - On Position

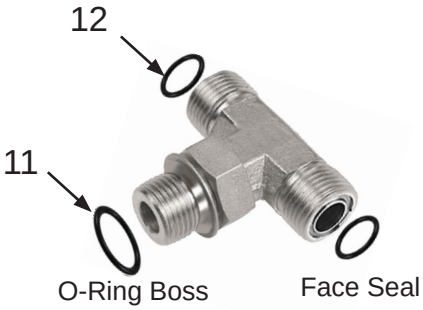

Use pipe dope on NPT threads.

13

(sold separately)

14

Use hydraulic oil or Vaseline to lubricate seals.
Do NOT use grease!
Do NOT use Teflon tape!

Ball Valve (On/Off) Assembly - Manual - JIC & ORFS

ID#	Qty	O-Ring Boss ORFS Part #	O-Ring Boss JIC Part #	NPT JIC Part # Obsolete	Description
-	**-**	**84802630**	**-**	**-**	**Ball Valve Assembly 1” ORFS O-Ring Boss w/Handle & Tees (Includes items 1-12)(April 2019 - Present)**
-	**-**	**-**	**84802604**	**-**	**Ball Valve Assembly 1” JIC O-Ring Boss w/Handle & Tees (Includes items 1-11)**
-	**-**	**-**	**-**	**84802600**	**Ball Valve Assembly 1” JIC NPT w/Handle & Tees (Includes items 1-10) Obsolete**
1	**1**	**84802605**		**-**	**Ball Valve Assembly 1" O-Ring Boss Body w/Handle (Includes items 3-9)**
		-		**84802800**	**Ball Valve Assembly 1" BKH 1NPT-1123 Body w/ Handle (Includes items 3-9) Obsolete**
3	1	84802910			Spud Stop LW56 (Critical for Assembly)
4	**1**	**84802903**			**Ball Valve Handle Assembly w/Hole (Includes items 4-6)**
5	1	87004120			BOLT SOCKET HEAD 6MMX30MM ZN
6	1	87100510			Nut Hex 6mmx1mm
-	**-**	**87075503**			**Handle to BV Bolt Kit (Includes items 7-9)**
7	1	87075410			Washer Fender Flat 6MM ZN DIN 9021
8	1	87075501			Star Washer External Tooth M6
9	1	87002460			Bolt Hex GR8.8 6mmx1mmx12mm
10	2	84703938	-		16 S5OLO-S 16-16-16 STRAIGHT THREAD BRANCH TEE FACE SEAL
		-	84692110	-	16 S5OX-S STRAIGHT THREAD TEE MJIC X MJIC X ADJ O-RING (6803-16-16-16)
		-		84677880	16 STX-S MALE BRANCH TEE MJIC X MJIC X MPIPE
11	2	84387800		-	916 O-RING BUNA 90
12	4	84375167	-	-	O-RING 021 N1490-90 #16 FACE SEAL NITRILE
13	1	-	11467301	-	Laser Plate Pressure KRFII Ball Valve Red JIC (sold separately)
		11467303	-		Label Pressure KFRII Ball Valve Red ORFS (sold separately)
14	1	-	11467302	-	Laser Plate Tank KRFII Ball Valve Red JIC (sold separately)
		11467304	-		Label Tank KFRII Ball Valve Blue ORFS (sold separately)

On/Off (Ball Valve) Mounting Kit - Manual - JIC (Pre May 2019)

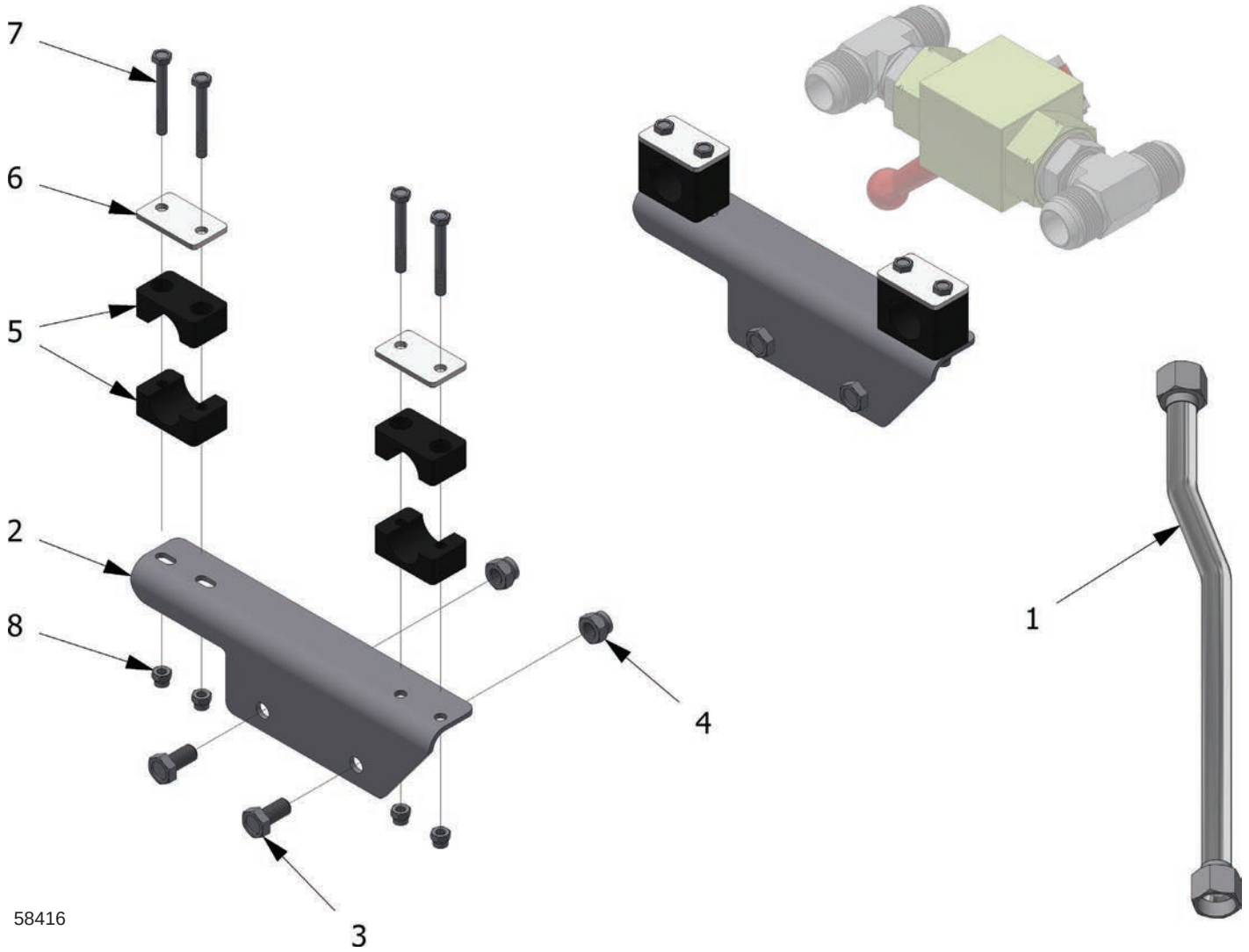

Optional SAE Manual ON/OFF Ball Valve Mounting Kit - JIC

ID#	Qty	Part #	Description
-	**(1)**	**05841601**	**SAE Manual Ball Valve Conversion Kit (Includes items 1-8)**
1	1	05842201	Switching Valve Return Tube to Ball Valve 1"
-	**-**	**07316101**	**SAE Manual Ball Valve Mounting Kit (Includes Items 2-8)**
2	1	05841602	Mounting Bracket Ball Valve Manual
3	2	87008510	Bolt Hex M10x1.5x35mm
4	2	87102000	Nut Nylock M10x1.5
-	**-**	**04631101**	**Clamp Set Hydraulic Tube 1" (Includes items 5-8)**
5	1	84750300	Clamp Hydraulic Tube 1"
6	1	84751200	Plate Clamp Tube Top COP-1 1/4"
7	2	86419500	Bolt Hex GR5 ZN 1/4”X2-1/4”
8	2	86626000	Nut Hex Nylock 1/4”

On/Off Valve Mounting Kit - JIC (Pre May 2019)

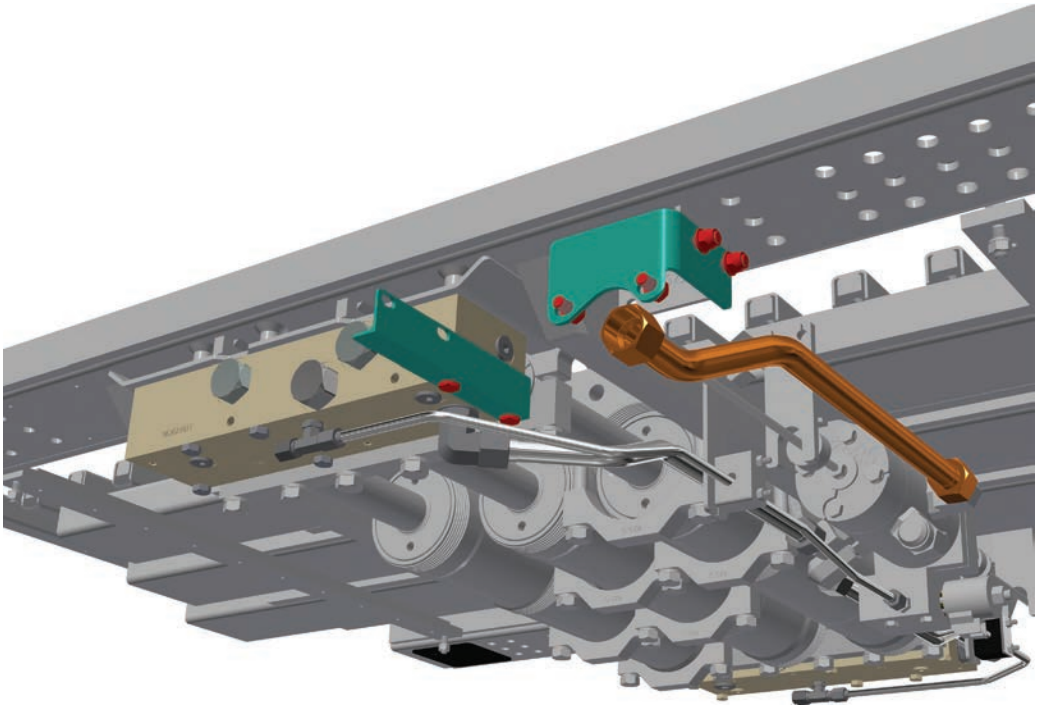

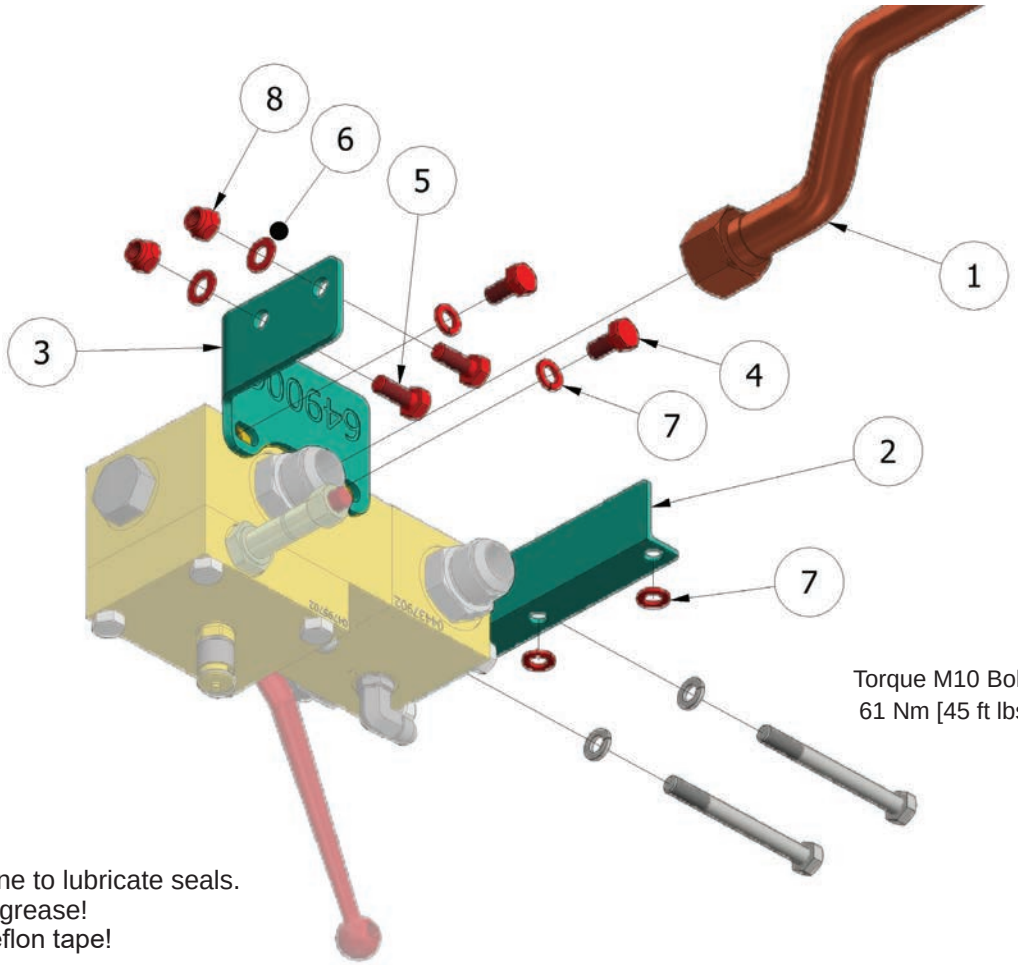

Torque M10 Bolts
61 Nm [45 ft lbs]

Use hydraulic oil or Vaseline to lubricate seals.
Do NOT use grease!
Do NOT use Teflon tape!

On/ Off Valve Mounting Kit - JIC

ID#	Qty	Part #	Description
-	**(1)**	**05890103**	**On/Off Ball Valve Conversion Kit (Includes items 1-8)**
1	1	05842402	Hydraulic Tube - Switching Valve Pressure to Ball Valve 1"
-	**1**	**07321201**	**Ball Valve Mounting Kit (Includes items 2-8)**
2	1	05890201	Mounting Bracket Side Ball Valve Electric
3	1	06490001	Mounting Bracket Rear Ball Valve Electric
4	2	87008470	BOLT HEX 10.9 10MM-1.5 X 20MM ZN HCS
5	2	87008510	BOLT HEX 10.9 10MM X 35MM
6	2	87076000	WASHER FLAT 10MM
7	4	87076500	WASHER LOCK 10MM ZN
8	2	87100510	Nut Hex Nylock M6x1
	2	87008510	Bolt Hex M10x1.5x35mm

Ball Valve (On/Off) Assembly - Electric/Manual

ORFS Post April 2019

04840002, 06830802, 06830602, 6525902 Obsolete Use 04718802

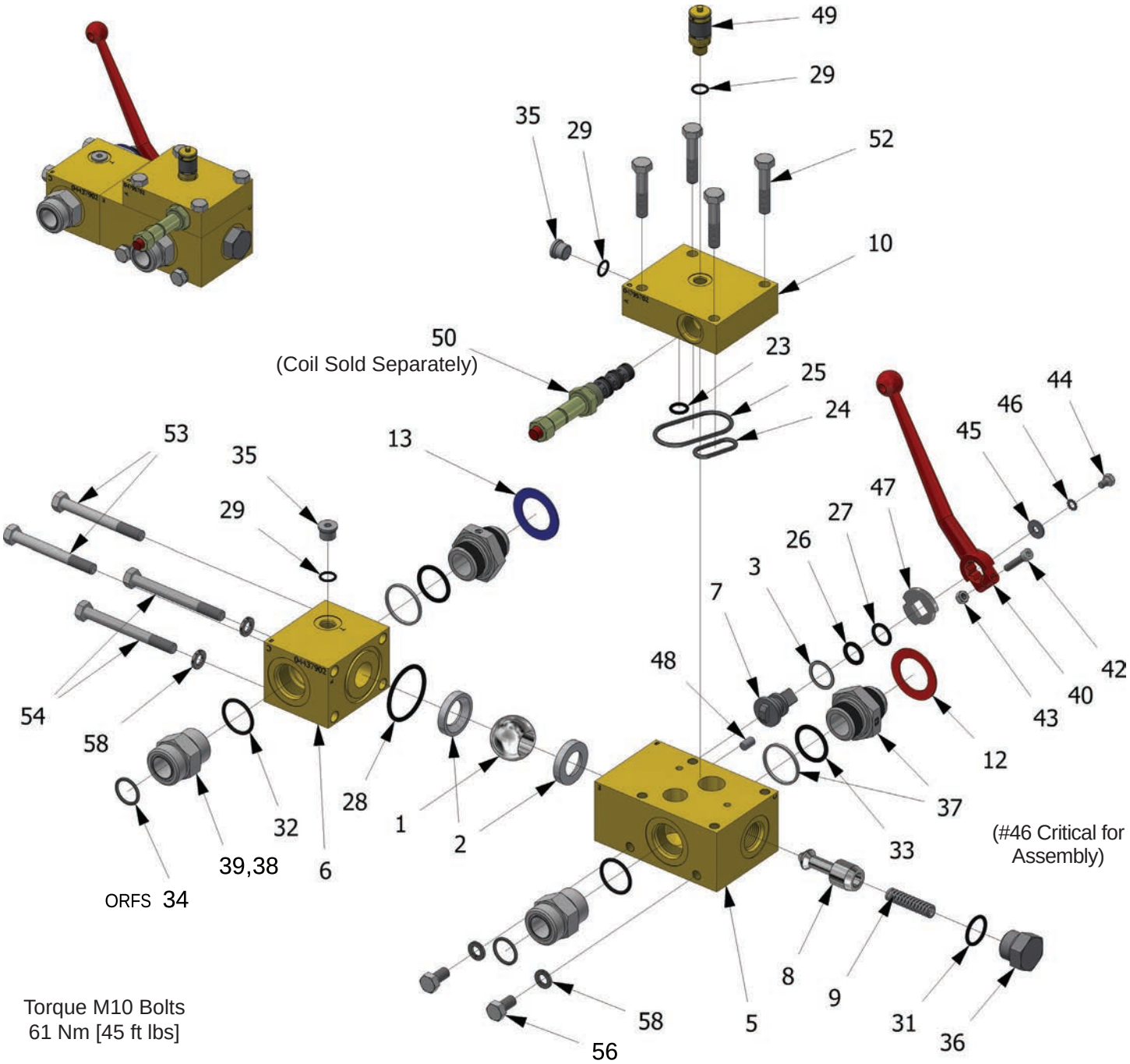

Torque M10 Bolts
61 Nm [45 ft lbs]

Use hydraulic oil or Vaseline to lubricate seals.
Do NOT use grease!
Do NOT use Teflon tape!

Ball Valve (On/Off) Assembly - Electric/Manual

ID#	Qty	ORFS Part#	JIC Part#	Description
-	**(1)**	**10426701**	**04178802**	**Pilot Operated Electric Manual On/Off Valve Assembly (Includes items below)**
1	1	04337101		BALL VALVE BALL KFD KRFII MAN/ELECT EUROPE & STAS
2	2	04337301		BUSHING SEAL BALL VALVE ELEC ON/OFF
3	1	04337601		SPUD WEAR WASHER MAN/ELE BV
5	1	04436602		BODY PO ON/OFF BV KRFII WH KFD MET
6	1	04437902		BODY NON-VALVE PO ON/OFF KRFII WH MET MAN/ELE BV
7	1	04438101		SHAFT SPUD KRFII KFD WH PO ELEC ON/OFF BALL VALVE
8	1	04438401		POPPET BALL VALVE PO ON/OFF
9	1	84453400		SPRING B-18273 EXT CKV LARGE
10	1	04795702		COVER PLATE PO EBV ECKV PLATE PO BV
12	1	11467301		PLATE ID KRFII-KFD 1" BV PRESSURE RED
13	1	11467302		PLATE ID KRFII-KFD 1" BV TANK BLUE
23	2	84376300		112 O-RING BUNA 90
24	2	84382200		216 O-RING BUNA 90
25	2	84384000		228 O-RING BUNA 90
26	1	84379600		208 O-RING BUNA 90
27	1	84390100		208 O-RING BACKUP BUNA 90
28	1	84383800		225 O-RING BUNA 90
29	3	84386800		906 O-RING BUNA 90
31	1	84387400		912 O-RING BUNA 90
32	2	84387800		916 O-RING BUNA 90 N1490-90
33	2	84382600		217 O-RING BUNA 90
34	2	84375167		016 O-Ring N1490-90 #16 Face Seal Nitrile
35	2	84687400		06 HP5ON-S HOLLOW HEX PLUG M O-RING HEX SOCKET (6408-H06-O)
36	1	84686900		12 P5ON-S HEX HEAD PLUG M O-RING HEX CAP (6408-O-12)
37	2	84671400		16 F40MX-S STRAIGHT BSPP MJIC X BSPP (7002-16-16)
38	2	-	84685400	16 F5OX-S STRAIGHT THREAD CONNECTOR MJIC X M O-RING (6400-16-16)
39	2	84703905	-	16 F5OLO-S 16-16 STRAIGHT THREAD CONN. FACE SEAL
40	**1**	**04657801**		**HANDLE BALL VALVE BENT WITH HOLE (Includes 42-43)**
42	1	87004120		BOLT SOCKET HEAD 6MMX30MM ZN
43	1	87100510		NUT HEX 6MM-1.0 ZINC
44	1	87002450		BOLT HEX GR8.8 6MMX10MM
45	1	87075410		WASHER FENDER FLAT 6MM ZN DIN 9021
46	1	87075501		WASHER LOCK M6 EXTERNAL TOOTH
47	1	84802910		SPUD STOP LW56 / BALL VALVE (Critical to Assembly)
48	1	86651500		PIN DOWEL 5/16X1/2
49	1	84904000		PRESSURE TEST COUPLER SMK20-G1/4-VC
50	1	85108800		VALVE CART. SV10-40M-0-N-00 HF
52	4	87008530		BOLT HEX GR10.9 10MM-1.5 X 50MM ZINC
53	1	87010500		BOLT HEX 10.9 10MMX90MM
54	3	87011000		BOLT HEX 10.9 10MM X 100MM 17MM HEAD
57	2	87008480		BOLT HEX 10.9 10MMX25MM HCS
58	5	87076500		WASHER LOCK 10MM ZN
-	-	**06932301**		**Seal Kit On/Off Ball Valve (Includes items 2-3, 23-33 & 85108798)**
-	**1**	**85108798**		**Seal Kit for Cartridge Valves (Includes (1) 910 O-Ring)**

Ball Valve (On/Off) Assembly w/Integrated Filter - Electric/Manual

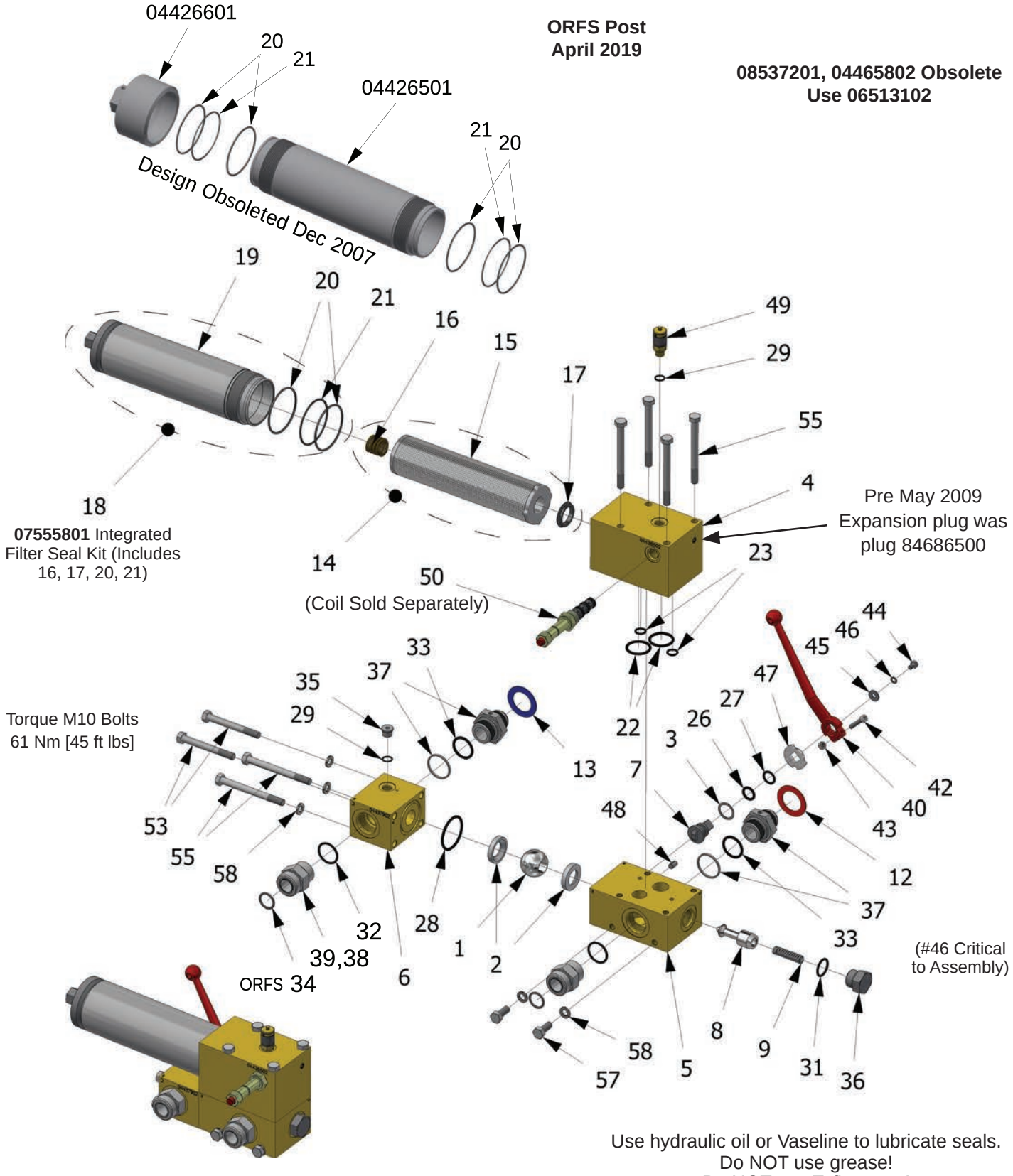

Use hydraulic oil or Vaseline to lubricate seals.
Do NOT use grease!
Do NOT use Teflon tape!

Ball Valve (On/Off) Assembly w/Integrated Filter - Electric/Manual

ID#	Qty	ORFS Part#	JIC Part#	Description
-	**(1)**	**10372401**	**06513102**	**Electric/Manual On/Off Ball Valve with Filter Assembly (Includes items below)**
1	1	04337101		BALL VALVE BALL KFD KRFII MAN/ELECT EUROPE & STAS
2	2	04337301		BUSHING SEAL BALL VALVE ELEC ON/OFF
3	1	04337601		SPUD WEAR WASHER MAN/ELE BV
4	1	04436502		FILTER BLOCK ARLON ON/OFF BV
5	1	04436602		BODY PO ON/OFF BV KRFII WH KFD MET
6	1	04437902		BODY NON-VALVE PO ON/OFF KRFII WH MET MAN/ELE BV
7	1	04438101		SHAFT SPUD KRFII KFD WH PO ELEC ON/OFF BALL VALVE
8	1	04438401		POPPET BALL VALVE PO ON/OFF
9	1	84453400		SPRING B-18273 EXT CKV LARGE
12	1	11467301		PLATE ID ORFS KRFII-KFD 1" BV PRESSURE RED
13	1	11467302		PLATE ID ORFS KRFII-KFD 1" BV TANK BLUE
14	**-**	**07914501**		**Filter, Seal & Spring Kit (Includes items 15-17)**
15	1	84006520		FILTER PARKER ARLON MXW 2-20B FAIREY ARLON WAS MXW2-GDL20
16	1	84450210		SPRING BYPASS 45PSI #S-02118 83.06.012.34
17	1	84350100		SEAL BUNA BYPASS GASKET FCP 03-400 (81.14.150.30)
18	**-**	**06151502**		**Welded Filter Canister Assembly w/O-Rings (Includes items 19-21)**
19	1	06151501		Weld Filter Canister Arlon WH (Was 04426501, 04426601, 84389047, (2) 84378447)
20	2	84378447		147 O-RING BUNA 90
21	1	84389047		147 O-RING BACKUP BUNA 90
22	2	84382800		218 O-RING BUNA 90
23	2	84376300		112 O-RING BUNA 90
26	1	84379600		208 O-RING BUNA 90
27	1	84390100		208 O-RING BACKUP BUNA 90
28	1	84383800		225 O-RING BUNA 90
29	2	84386800		906 O-RING BUNA 90
31	1	84387400		912 O-RING BUNA 90
32	2	84387800		916 O-RING BUNA 90
33	2	84382600		217 O-RING BUNA 90
34	2	84375167		016 O-Ring N1490-90 #16 Face Seal Nitrile
35	1	84687400		06 HP5ON-S HOLLOW HEX PLUG M O-RING HEX SOCKET (6408-H06-O)
36	1	84686900		12 P5ON-S HEX HEAD PLUG M O-RING HEX CAP (6408-O-12)
37	2	84671400		16 F40MX-S STRAIGHT BSPP MJIC X BSPP (7002-16-16)
38	2	-	84685400	16 F5OX-S STRAIGHT THREAD CONNECTOR MJIC X M O-RING (6400-16-16)
39	2	84703905	-	16 F5OLO-S 16-16 STRAIGHT THREAD CONN. FACE SEAL
40	**1**	**04657801**		**HANDLE BALL VALVE BENT WITH HOLE (Includes 42-43)**
42	1	87004120		BOLT SOCKET HEAD 6MMX30MM ZN
43	1	87100510		NUT HEX 6MM-1.0 ZINC
44	1	87002450		BOLT HEX GR8.8 6MMX10MM
45	1	87075410		WASHER FENDER FLAT 6MM ZN DIN 9021
46	1	87075501		WASHER LOCK M6 EXTERNAL TOOTH
47	1	84802910		SPUD STOP LW56 / BALL VALVE
48	1	86651500		PIN DOWEL 5/16X1/2
49	1	84904000		PRESSURE TEST COUPLER SMK20-G1/4-VC
50	1	85108800		VALVE CART. SV10-40M-0-N-00 HF (85108798 Cartridge Valve Seal Kit)
53	2	87010500		BOLT HEX 10.9 10MMX90MM
55	6	87011500		BOLT HEX 10.9 10MMX110MM
57	2	87008480		BOLT HEX 10.9 10MMX25MM HCS
58	5	87076500		WASHER LOCK 10MM ZN
-	**-**	**06932301**		**Seal Kit On/Off Ball Valve (Includes 2-3, 17, 20-33 & 85108798)**
-	**1**	**85108798**		**Seal Kit for Cartridge Valves (Includes (1) 910 O-Ring)**

Conversion Kit - Manual to Electric On/Off Ball Valve Assembly

04839402 Obsolete
Use 04839502

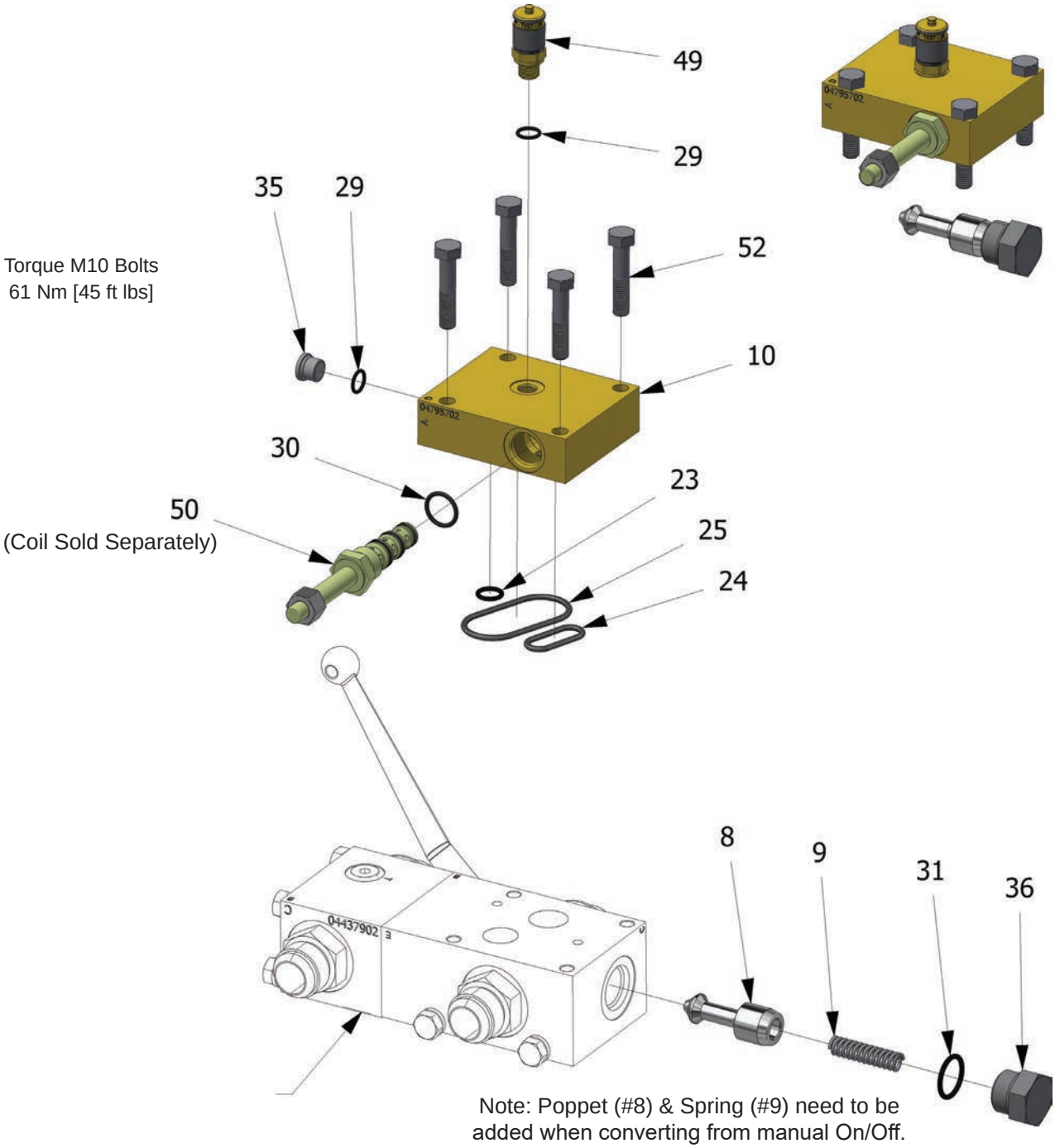

Use hydraulic oil or Vaseline to lubricate seals.
Do NOT use grease!
Do NOT use Teflon tape!

Conversion Kit - Manual to Electric On/Off Ball Valve Assembly

ID#	Qty	Part #	Description
-	**(1)**	**04839502**	**On/Off Ball Valve Conversion Kit - Manual to Electric**
8	1	04438401	POPPET BALL VALVE PO ON/OFF
9	1	84453400	SPRING B-18273 EXT CKV LARGE
10	1	04795702	COVER PLATE PO EBV ECKV PLATE PO BV
23	1	84376300	112 O-RING BUNA 90
24	1	84382200	216 O-RING BUNA 90
25	1	84384000	228 O-RING BUNA 90
29	2	84386800	906 O-RING BUNA 90
30	1	84387200	910 O-RING BUNA 90
31	1	84387400	912 O-RING BUNA 90
35	1	84687400	06 HP5ON-S HOLLOW HEX PLUG M O-RING HEX SOCKET (6408-H06-O)
36	1	84686900	12 P5ON-S HEX HEAD PLUG M O-RING HEX CAP (6408-O-12)
49	1	84904000	PRESSURE TEST COUPLER SMK20-G1/4-VC
50	1	85108800	VALVE CART. SV10-40M-0-N-00 HF
52	4	87008530	BOLT HEX GR10.9 10MM-1.5 X 50MM ZINC

Conversion Kit - Manual to Electric On/Off Ball Valve w/Filter

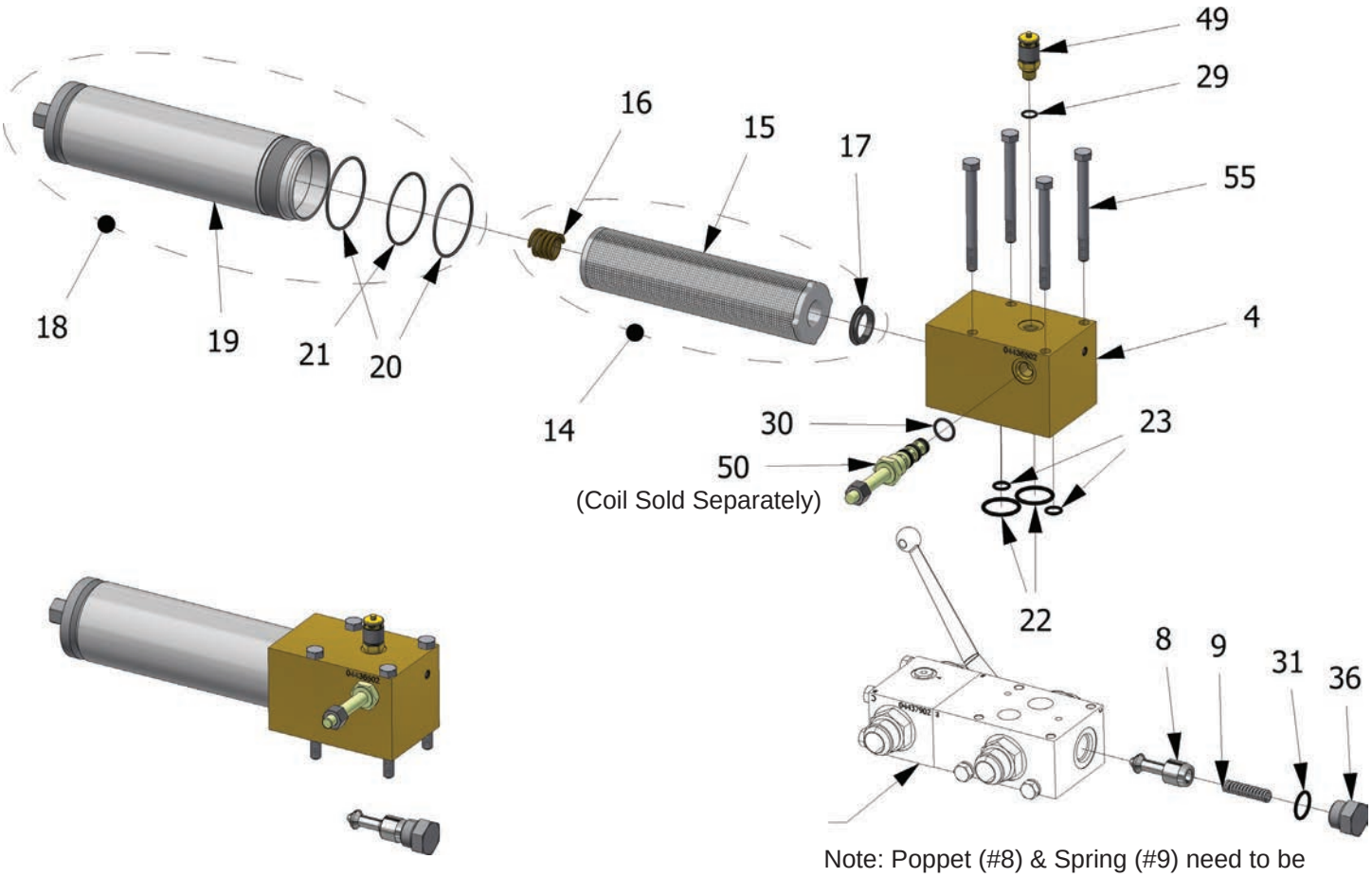

Note: Poppet (#8) & Spring (#9) need to be added when converting from manual On/Off.

Torque M10 Bolts
61 Nm [45 ft lbs]

Use hydraulic oil or Vaseline to lubricate seals.
Do NOT use grease!
Do NOT use Teflon tape!

Conversion Kit - Manual to Electric On/Off Ball Valve w/Integrated Filter

ID#	Qty	Part #	Description
-	**(1)**	**04839602**	**On/Off Ball Valve w/Integrated Filter Conversion Kit - Manual to Electric**
4	1	04436502	FILTER BLOCK ARLON ON/OFF BV
8	1	04438401	POPPET BALL VALVE PO ON/OFF
9	1	84453400	SPRING B-18273 EXT CKV LARGE
14	**-**	**07914501**	**FILTER SEAL & SPRING ASSY KFD WH**
15	1	84006520	FILTER PARKER ARLON MXW 2-20B FAIREY ARLON WAS MXW2-GDL20
16	1	84450210	SPRING BYPASS 45PSI #S-02118 83.06.012.34
17	1	84350100	SEAL BUNA BYPASS GASKET FCP 03-400 (81.14.150.30)
18	**-**	**06151502**	**FILTER CANISTER ASSY KFD 400 WELDED**
19	1	06151501	WELD FILTER CANISTER ARLON WH Filter Canister
20	2	84378447	147 O-RING BUNA 90
21	1	84389047	147 O-RING BACKUP BUNA 90
22	2	84382800	218 O-RING BUNA 90
23	2	84376300	112 O-RING BUNA 90
29	2	84386800	906 O-RING BUNA 90
30	1	84387200	910 O-RING BUNA 90
31	1	84387400	912 O-RING BUNA 90
36	1	84686900	12 P5ON-S HEX HEAD PLUG M O-RING HEX CAP (6408-O-12)
49	1	84904000	PRESSURE TEST COUPLER SMK20-G1/4-VC
50	1	85108800	VALVE CART. SV10-40M-0-N-00 HF
55	4	87011500	BOLT HEX 10.9 10MMX110MM

On / Off Valve Assembly - ORFS (Post 2019)

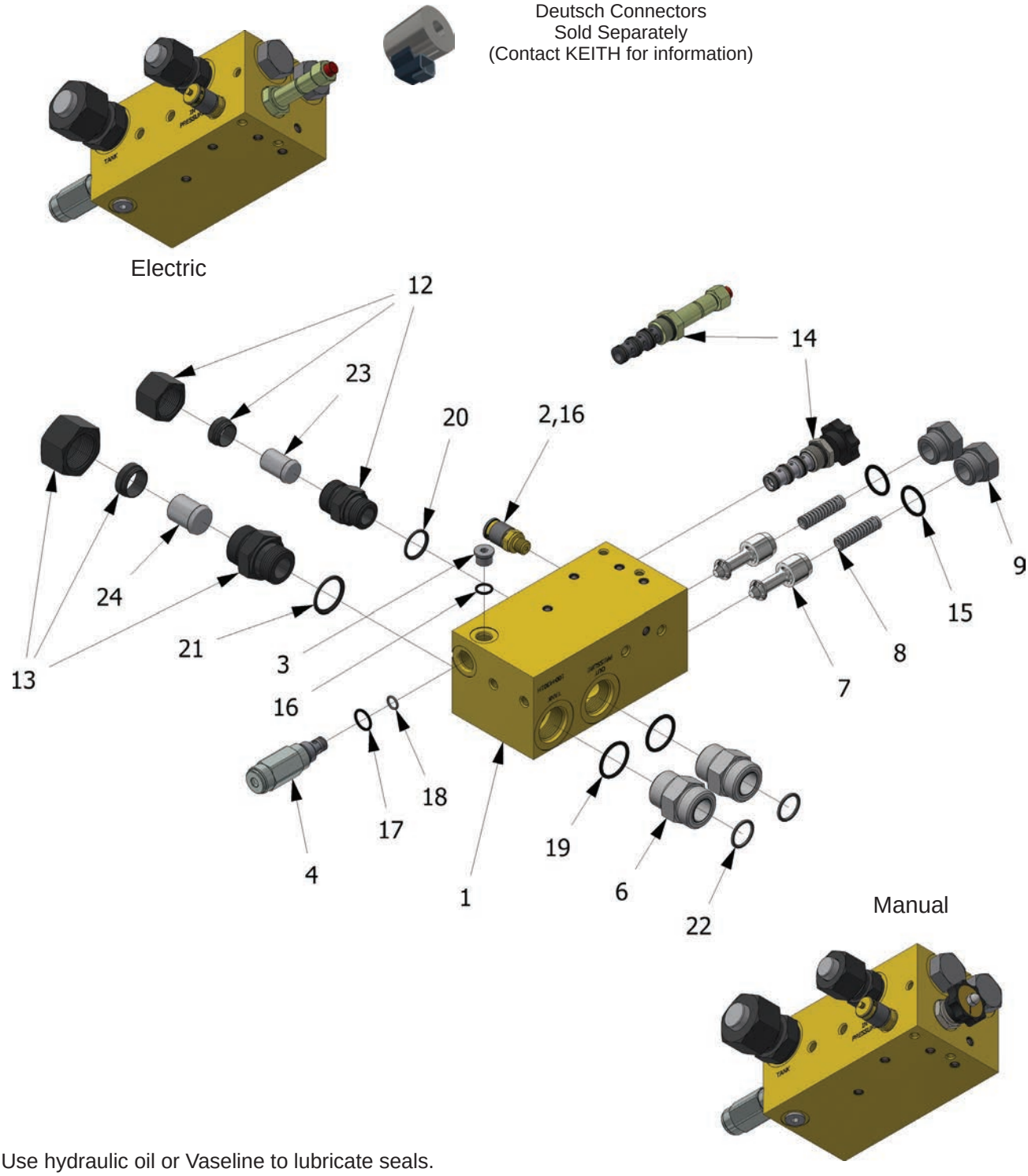

Use hydraulic oil or Vaseline to lubricate seals.
Do NOT use grease!
Do NOT use Teflon tape!

On / Off Valve Assembly - ORFS (Post 2019)

ID#	Qty	Electric Part #	Manual Part #	Description
-	**(1)**	**10345604**	**10345601**	**ON / OFF VALVE ASSEMBLY (Includes items 1-28)**
1	1	10044301		Main Body On-Off Ball Valve
2	1	84904000		Test Coupling SMK20-G1/4VC
3	1	84687400		06 HP5ON-S HOLLOW HEX PLUG M O-RING HEX SOCKET
4	1	85107560		RELIEF VALVE (3000 PSI), HYDRAFORCE RVO8-20H-0-N-33/30.0
6	2	84703905		16 F5OLO-S 16-16 STRAIGHT THREAD CONN. FACE SEAL
7	2	04438401		On\Off Poppet
8	2	84453400		SPRING B-18273 EXT CKV LARGE
9	2	84686900		12 P5ON-S Hex Head Plug M O-Ring Hex Cap
12	1	84678856		GE-R-ED MSLR DTUD Connector (BSPP w/Seal Type E) GE20SREDCF
13	1	84678857		GE-R-ED MSLR DTUD Connector (BSPP w/Seal Type E) GE25SREDCF
14	1	85108800	-	CARTRIDGE VALVE, SOLENOID
		-	85105200	MANUAL CONTROL VALVE ACTUATOR
15	2	84387400		912 O-Ring Buna 90
16	2	84386800		906 O-Ring Buna 90
17	1	84387000		908 O-Ring Buna 90
18	1	84375210		# 012 O-Ring Buna, 90 DURO
19	2	84387800		916 O-Ring Buna 90
20	1	84689951		EO20 EOLASTIC SOFT SEAL FOR 12 BSPP THREADS - ED26X1.5X
21	1	84689954		EO25 EOLASTIC SOFT SEAL FOR 16 BSPP THREADS - ED33X2X
22	2	84375167		O-RING 016 N1490-90 #16 FACE SEAL NITRILE
23	1	10620601		Plug Hyd Fitting GE-R-ED MSLR DTUD Connector GE20SREDCF
24	1	10620602		Plug Hyd Fitting GE-R-ED MSLR DTUD Connector GE25SREDCF
-	**-**	**85108798**		**Seal Kit for Cartridge Valves (Includes (1) 910 O-Ring)**

On / Off Manual Valve Assembly - JIC (2019)

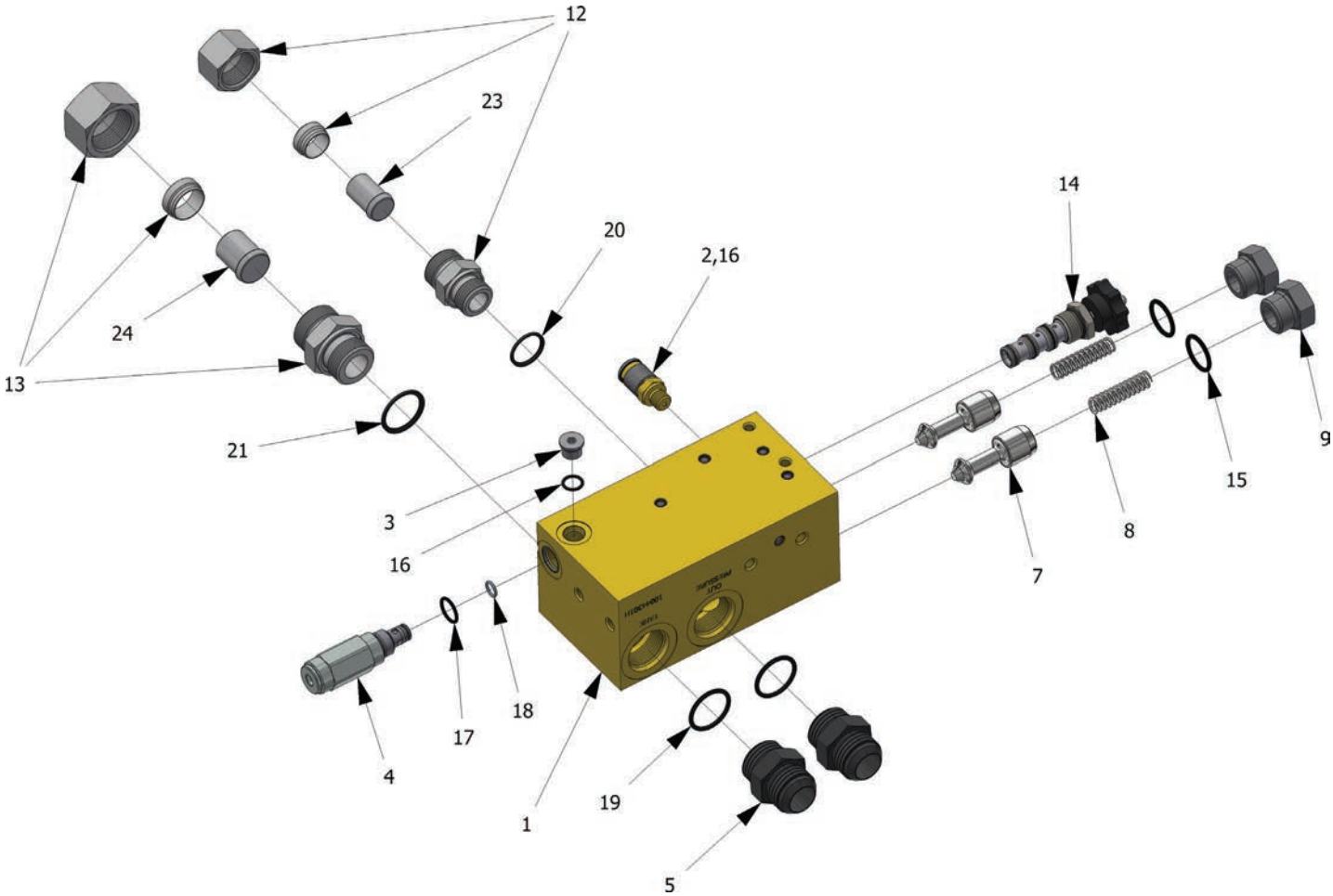

10217601

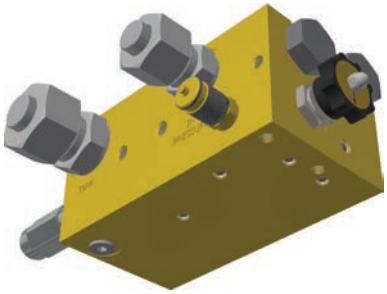

Manual

Use hydraulic oil or Vaseline to lubricate seals.
Do NOT use grease!
Do NOT use Teflon tape!

On / Off Manual Valve Assembly - JIC (2019)

ID#	Qty	Manual Part #	Description
-	**(1)**	**10217601**	**ON / OFF VALVE ASSEMBLY (Includes items 1-23)**
1	1	10044301	Main Body On-Off Ball Valve
2	1	84904000	Test Coupling SMK20-G1/4VC
3	1	84687400	06 HP5ON-S Hollow Hex Plug M O-Ring Hex Socket
4	1	85107560	Relief Valve (3000 PSI) 33/33.0, Hydraforce
5	2	84685400	16 F5OX-S Straight Thread Connector MJIC X M O-Ring
7	2	04438401	On\Off Poppet
8	2	84454730	71570 Spring
9	2	84686900	12 P5ON-S Hex Head Plug M O-Ring Hex Cap
12	1	84678856	GE-R-ED MSLR DTUD Connector (BSPP w/Seal Type E) GE20SREDCF
13	1	84678857	GE-R-ED MSLR DTUD Connector (BSPP w/Seal Type E) GE25SREDCF
14	1	85105200	MANUAL CONTROL VALVE ACTUATOR
15	2	84387400	912 O-Ring Buna 90
16	2	84386800	906 O-Ring Buna 90
17	1	84387000	908 O-Ring Buna 90
18	1	84375210	# 012 O-Ring Buna, 90 DURO
19	2	84387800	916 O-Ring Buna 90
20	1	84689951	EO20 O-Ring
21	1	84689954	EO25 O-Ring
23	1	10620601	Plug Hyd Fitting GE-R-ED MSLR DTUD Connector GE20SREDCF
24	1	10620602	Plug Hyd Fitting GE-R-ED MSLR DTUD Connector GE25SREDCF
-	**-**	**85108798**	**Seal Kit for Cartridge Valves (Includes (1) 910 O-Ring)**

On / Off Electric Valve Assembly - JIC (2018)

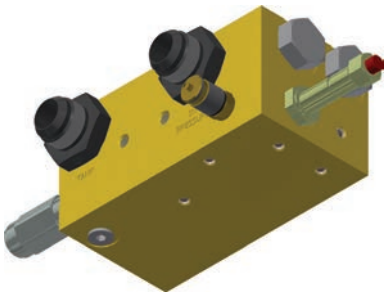

Electric

Deutsch Connectors
Sold Separately
(Contact KEITH for information)

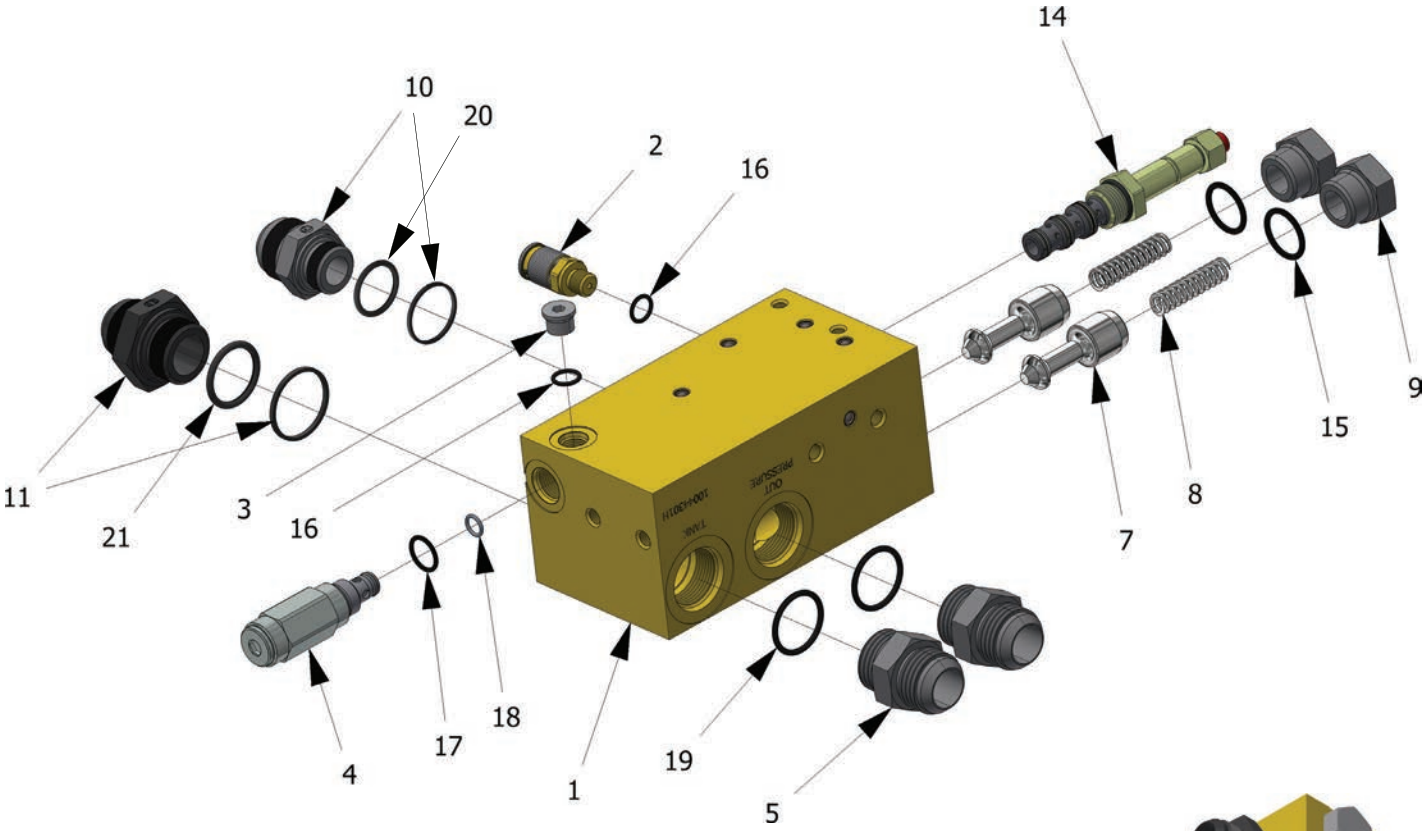

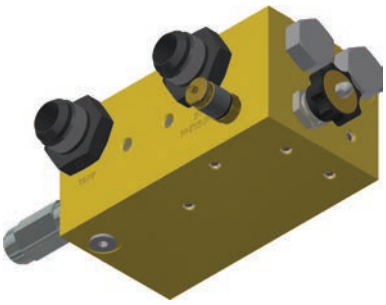

Manual

Use hydraulic oil or Vaseline to lubricate seals.
Do NOT use grease!
Do NOT use Teflon tape!

On / Off Electric Valve Assembly - JIC (2018)

ID#	Qty	Electric Part #	Manual Part #	Description
-	**(1)**	**10044401**	**10217601**	**ON / OFF VALVE ASSEMBLY (Includes items 1-23)**
1	1	10044301		Main Body On-Off Ball Valve
2	1	84904000		Test Coupling SMK20-G1/4VC
3	1	84687400		06 HP5ON-S Hollow Hex Plug M O-Ring Hex Socket
4	1	85107560		Relief Valve (3000 PSI) 33/33.0, Hydraforce
5	2	84685400		16 F5OX-S Straight Thread Connector MJIC X M O-Ring
7	2	04438401		On\Off Poppet
8	2	84454730		71570 Spring
9	2	84686900		12 P5ON-S Hex Head Plug M O-Ring Hex Cap
10	1	84671380		16-12 F40MX-S STRAIGHT BSPP MJIC X BSPP (7002-16-12)
11	1	84671400		16 F40MX-S STRAIGHT BSPP MJIC X BSPP (7002-16-16)
14	1	85108800	-	CARTRIDGE VALVE, SOLENOID
		-	85105200	MANUAL CONTROL VALVE ACTUATOR
15	2	84387400		912 O-Ring Buna 90
16	2	84386800		906 O-Ring Buna 90
17	1	84387000		908 O-Ring Buna 90
18	1	84375210		# 012 O-Ring Buna, 90 DURO
19	2	84387800		916 O-Ring Buna 90
20	1	84689951		EO20 O-Ring
21	1	84382600		217 O-RING BUNA 90
-	**-**	**85108798**		**Seal Kit for Cartridge Valves (Includes (1) 910 O-Ring)**

Electrical Controls

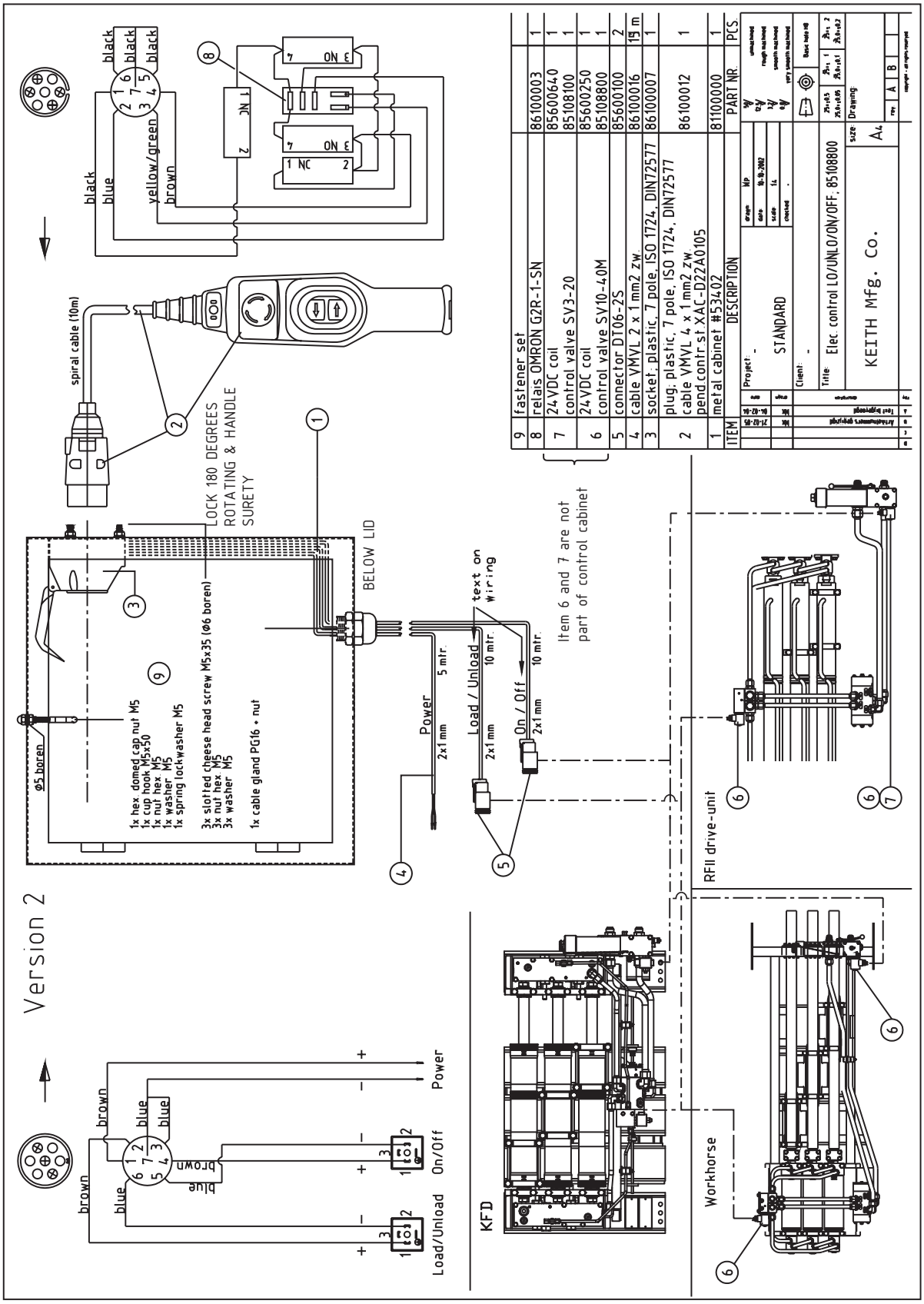

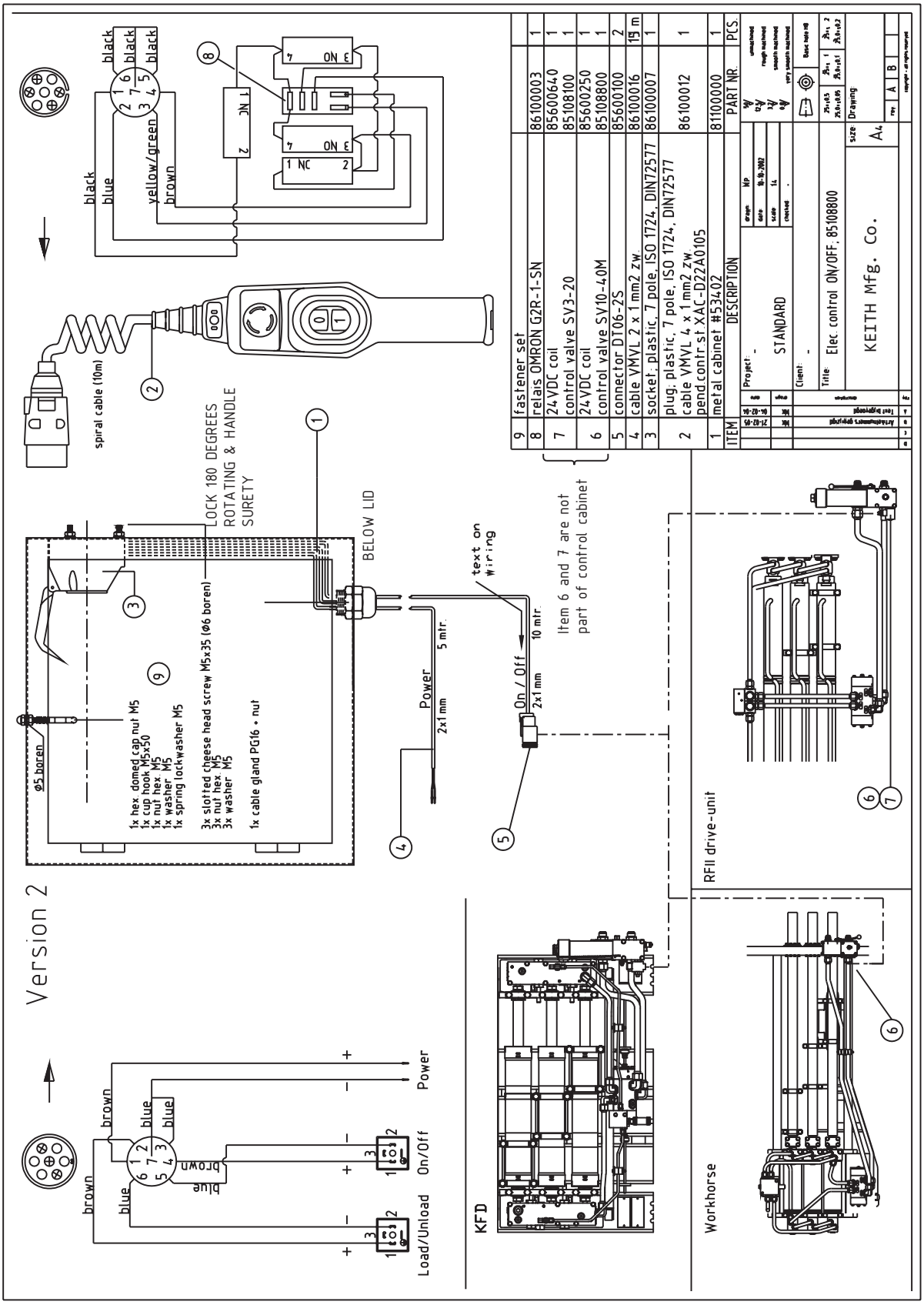

ITEM	DESCRIPTION	PART NR.	PCS.
9	fastener set	86100003	1
8	relais OMRON G2R-1-SN	85600640	1
7	24VDC coil control valve SV3-20	85108100	1
6	24VDC coil control valve SV10-40M	85600250 85108800	1 1
5	connector DT06-2S	85600100	2
4	cable VMYL 2 x 1 mm2 zw.	86100016	15 m
3	socket; plastic, 7 pole, ISO 1724, DIN72577	86100007	1
2	plug, plastic, 7 pole, ISO 1724, DIN72577 cable VMYL 4 x 1 mm2 zw. pend.contr.st XAC-D22A0105	86100012	1
1	metal cabinet #53402	81100000	1